MANDÍK

TPM 158/22
Version 2026-11-09

SEDS-L

Single compartment smoke control damper

Technical Documentation
Installation, Commissioning, Operation, Maintenance and Service Manual

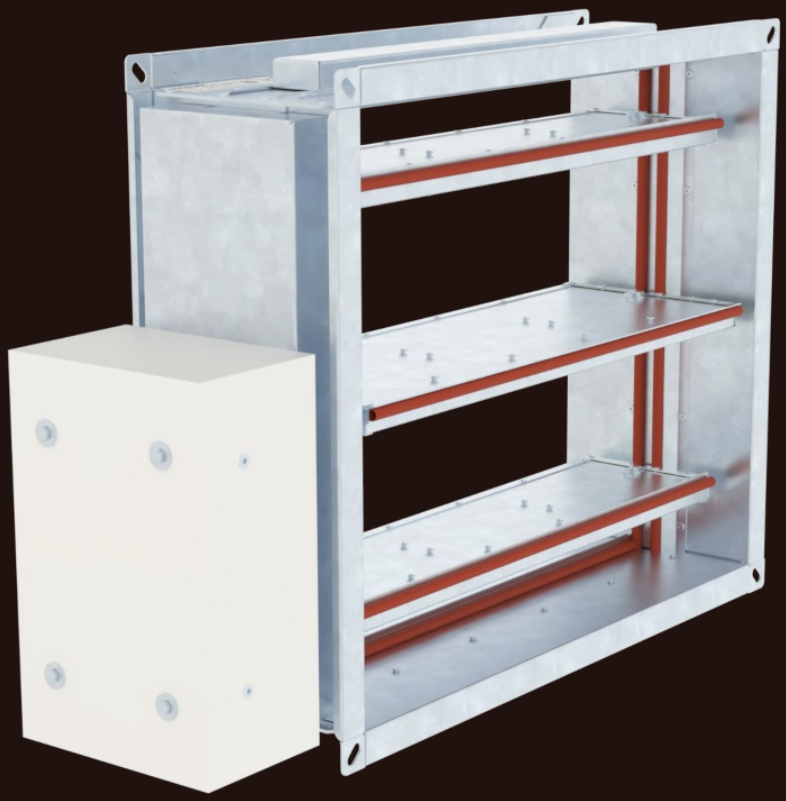

UKCA 2822

CE 1391

CCPI ASSESSED PRODUCT INFORMATION 015800192/1227 Smoke Control Dampers

MANDÍK®

www.mandik.co.uk

Manufacturer
MANDÍK, a.s. • Dobříšská 550 • 267 24 Hostomice • Czech Republic • Tel.: +420 311 706 742 • E-Mail: mandik@mandik.cz

Authorized representative
Mandik UK Limited • 210 Park Avenue • Aztec West • Bristol BS32 4SY • United Kingdom • Tel.: +44 117 4526376 • E-Mail: help@mandik.co.uk

These technical specifications state a row of manufactured sizes and models of smoke Single compartment smoke control damper SEDS-L. It is valid for production, designing, ordering, delivery, maintenance and operation.

CONTENT

I. GENERAL....3
Description....3
II. DESIGN....4
Design with actuating mechanism....4
GEN1 - MDCM and MDPM....8
Communication and control module MDPM....8
III. DIMENSIONS....9
Technical parameters....10
IV. INSTALLATION....12
Placement and installation....12
V. SUSPENSION SYSTEMS....13
Example of duct connection....15
VI. ACCESSORIES....16
VII. TECHNICAL DATA....17
Pressure loss....17
Noise data - level of acoustic output corrected with filter A....18
VIII. MATERIAL, FINISHING....19
IX. TRANSPORTATION AND STORAGE....19
Logistic terms....19
X. ASSEMBLY, ATTENDANCE AND MAINTENANCE....20
Electrical connection of the actuator in protection box....20
Connection of the control module MDPM & MDCM interfaces inside protection box....21
Entry into service and revisions....22
XI. ORDERING INFORMATION....23
Ordering key....23
Data label....24

I. GENERAL

Description

Dampers - SEDS-L are shutters in smoke ventilation system. Dampers are designed to remove heat and combustion products (e.g. smoke) from single fire compartment. In the event of fire the Smoke and Fire ventilation system opens the damper in the affected section which removes combustion products and heat from this section.

The damper blade is controlled by electrical actuating mechanism.

The dampers can be installed in various duct sizes with respect to the field of direct applications according with BS EN 1366-9.

The field of direct applications based on tests results is acceptable according to BS EN 1363-1, part A.1 and A.2, BS EN 1366-2, part 13 and BS EN 1366-10, part 9.

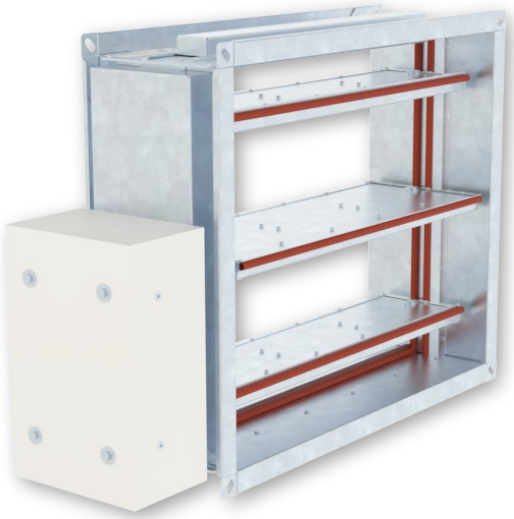

Damper SEDS-L

Damper characteristics

- CE certified acc. to BS EN 12101-8
- Tested in accordance with BS EN 1366-10
- Classified **E_{600} 120 (v_{ed}-h_{od}-i↔o) S1500C_{mod}MAsingle** acc. to BS EN 13501-4
- External Casing leakage class ATC 4 (old marking “B“), Internal leakage min. class 3 acc. to BS EN 1751
- Cycling test in class C_{mod} acc. to BS EN 12101-8
- Certificate of constancy of performance UKCA No. 2822-UKCA-CPR-XXXX
- Certificate of constancy of performance CE No. 1391-CPR-XXXX/XXXX
- Declaration of Perfomance UKCA No. PM/SEDS-L/02/XX/X
- Declaration of Perfomance CE No. PM/SEDS-L/01/XX/X
- Hygienic assessment - Report No. 1.6/pos/19/19b

Working conditions

- Exact damper function is provided under the following conditions
  - maximum air velocity 12 m/s
  - underpressure max. -1500 Pa or overpressure max. 500 Pa
- Dampers are installed with the horizontal or vertical axis of the blades.
- Dampers are intended for installation on air ducts and in/onto the walls where in the case of wall installation, this wall with damper does not have fire resistance and therefore does not separate two fire compartments.
- Dampers are suitable for systems without abrasive, chemical and adhesive particles.
- Dampers are designed for macroclimatic areas with mild climate according to BS EN IEC 60 721-3-3 ed.2., class 3K22.
- Temperature in the place of installation is permitted to range from -20°C to +50°C.
- The Damper can be fitted with a grille.

II. DESIGN

Design with actuating mechanism

Design .44 and .54

- Belimo actuators are used for dampers, series BEN, BEE, BE for 230V AC resp. 24 V AC/DC actuators (universal 24V or 230V supply) are used for large size of dampers.
- After connection to the power supply voltage, the actuator moves the damper blade to the "OPEN" position or "CLOSED" (according to the corresponding connection, see wiring diagram). If the power supply is interrupted, the actuator stops at the current position. The signalling of the "OPEN" and "CLOSED" damper blade positions is ensured by two built-in fixed “potential-free” end- limit switches.
- The actuator for operating the damper blade is mounted in an insulated cover/box. It is accessible after removing the cover lid. The electrical connection of the actuator is made with a non-flammable cable (or a cable located in the adjoining cable duct), which passes through an opening made in the wall of the insulated cover/box when installing the damper or when connecting the actuator power cable. The power and control cable must be CAT 3 as BS 8519.

Design .65

- Belimo modulating actuators, BEN (BEE)-SR series for 24V AC/DC are specially designed for remote control of smoke control dampers. The position of the damper blade is adjustable by means of control voltage 0 (2)...10V DC.
- The signalling of the "OPEN" and "CLOSED" damper blade positions is ensured by two built-in fixed “potential-free” limit switches.
- The actuator for operating the damper blade is mounted in an insulated cover/box. It is accessible after removing the cover lid. The electrical connection of the actuator is made with non-flammable cables (or cables located in the adjoining cable duct), which pass through an opening made in the wall of the insulated cover when installing the damper or when connecting the power cables of the actuator. The power and control cable must be CAT 3 as BS 8519.

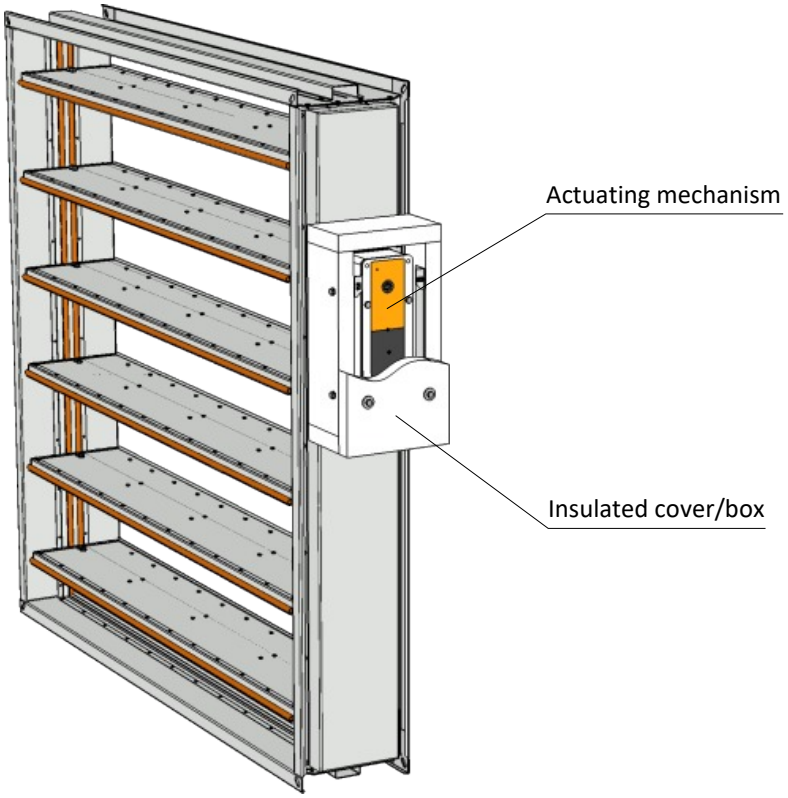

Design .44, .54 and .65

Actuator BELIMO BEN 24(-ST)

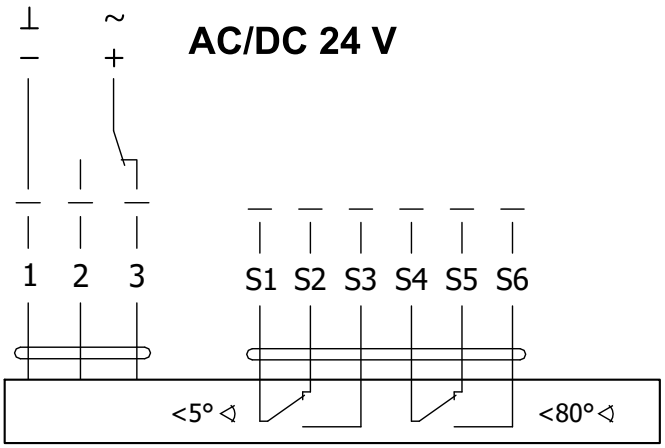

Actuator BELIMO BEN 24-SR

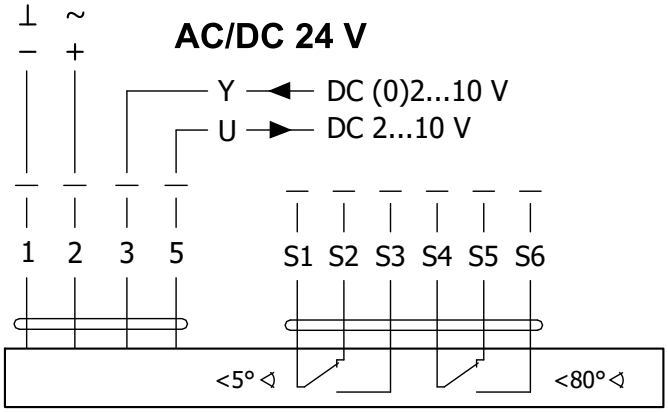

Actuator BELIMO BEN 230

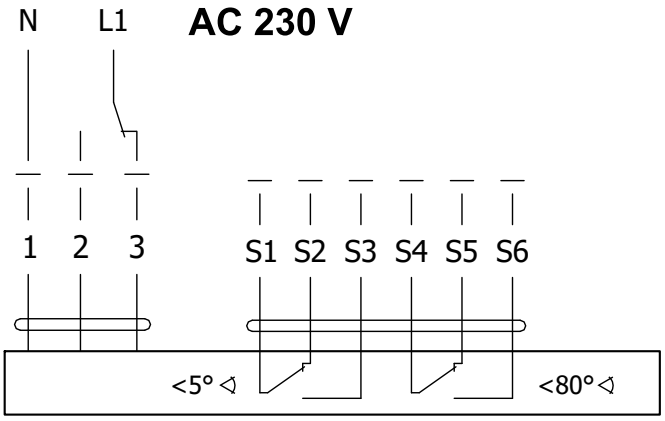



Extended leads are not possible with smoke control dampers as the belimo cables are not fire rated to CAT3 to BS 8519. Field wiring must be brought into and terminated within the damper housing. For more detail → see pages 20 to 22, paragraph Assembly.

Actuator BELIMO BEN 24(-ST), BEN 24-SR, BEN 230			
Actuator BELIMO - 15 Nm	**BEN 24(-ST)**	**BEN 24-SR***	**BEN 230**
Power voltage	AC/DC 24 V 50/60Hz	AC/DC 24 V 50/60Hz	AC 230 V 50/60Hz
Power consumption - in operation - in the end position	3 W 0,1 W	3 W 0,3 W	4 W 0,4 W
Dimensioning	6 VA (Imax 8,2 A @ 5 ms)	6,5 VA (Imax 8.2 A @ 5 ms)	7 VA (Imax 4 A @ 5 ms)
Protection class	III	III	II
Degree of protection		IP 54	
Adjustment time for 95°		< 30 s	
Ambient temperature Storage temperature		-30°C ... +55°C -40°C ... +80°C	
Connection - drive - auxiliary switch	Cable 1 m, 3 x 0,75 mm² Cable 1 m, 6 x 0,75 mm² (BEN 24-ST) with plug connectors	Cable 1 m, 4 x 0,75 mm² Cable 1 m, 6 x 0,75 mm²	Cable 1 m, 3 x 0,75 mm² Cable 1 m, 6 x 0,75 mm²

* Only available for 24V and selected damper sizes

Actuator BELIMO BEE 24(-ST)

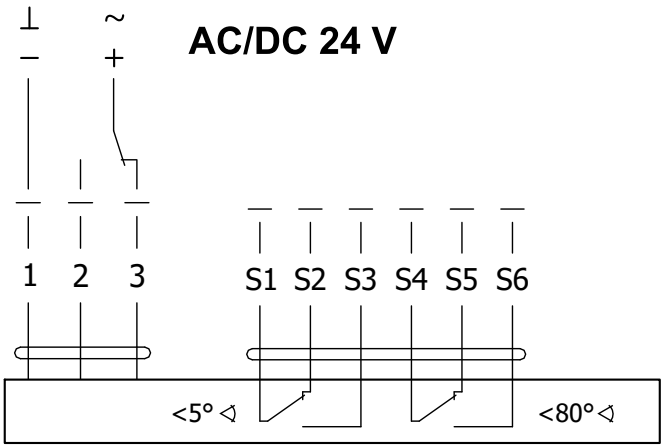

Actuator BELIMO BEE 24-SR

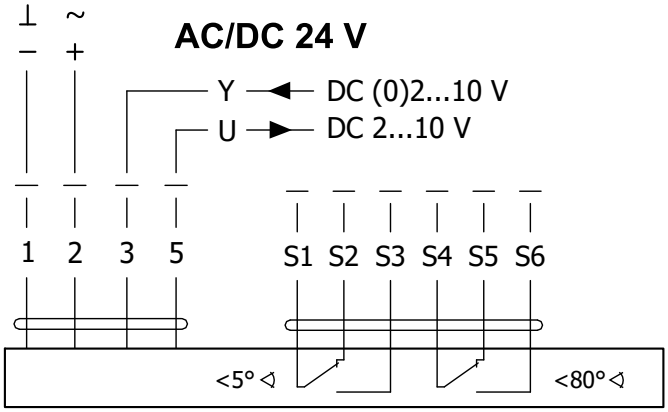

Actuator BELIMO BEE 230

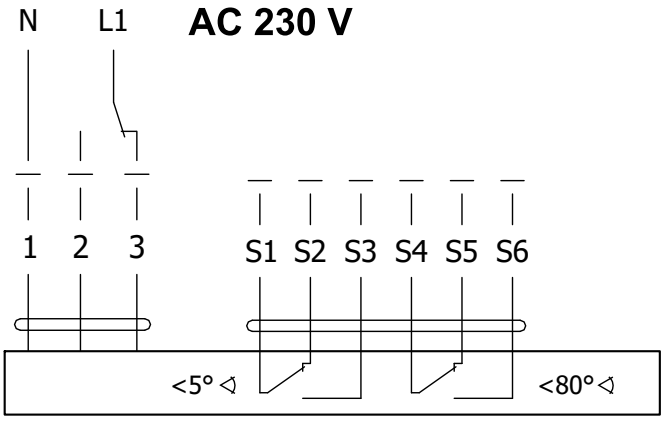



Extended leads are not possible with smoke control dampers as the belimo cables are not fire rated to CAT3 to BS 8519. Field wiring must be brought into and terminated within the damper housing. For more detail → see pages 20 to 22, paragraph Assembly.

Actuator BELIMO BEE 24(-ST), BEE 24-SR, BEE 230			
Actuator BELIMO - 25 Nm	**BEE 24(-ST)**	**BEE 24-SR***	**BEE 230**
Power voltage	AC/DC 24 V 50/60Hz	AC/DC 24 V 50/60Hz	AC 230 V 50/60Hz
Power consumption - in operation - in the end position	2,5 W 0,1 W	3 W 0,3 W	3,5 W 0,4 W
Dimensioning	5 VA (Imax 8,2 A @ 5 ms)	5,5 VA (Imax 8.2 A @ 5 ms)	6 VA (Imax 4 A @ 5 ms)
Protection class	III	III	II
Degree of protection		IP 54	
Adjustment time for 95°		< 60 s	
Ambient temperature Storage temperature		-30°C ... +55°C -40°C ... +80°C	
Connection - drive - auxiliary switch	Cable 1 m, 3 x 0,75 mm² Cable 1 m, 6 x 0,75 mm² (BEE 24-ST) with plug connectors	Cable 1 m, 4 x 0,75 mm² Cable 1 m, 6 x 0,75 mm²	Cable 1 m, 3 x 0,75 mm² Cable 1 m, 6 x 0,75 mm²

* Only available for 24V and selected damper sizes

Actuator BELIMO BE 24-12(-ST)

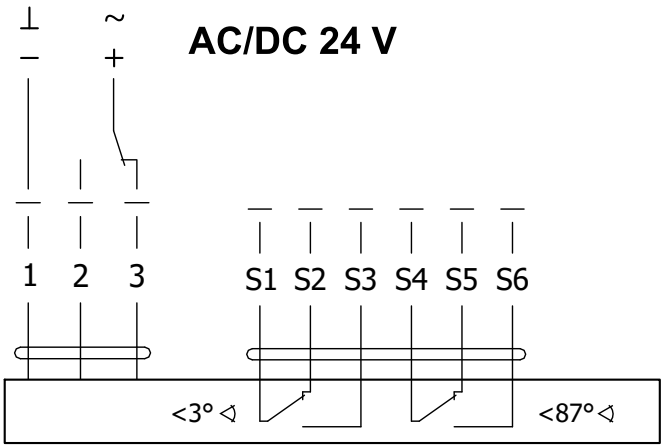

Actuator BELIMO BE 230-12

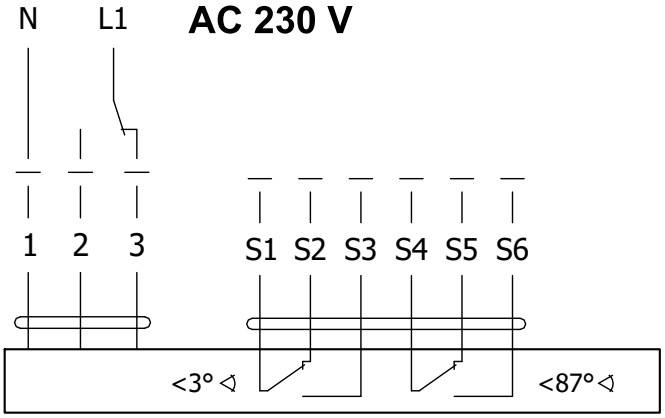



Extended leads are not possible with smoke control dampers as the belimo cables are not fire rated to CAT3 to BS 8519. Field wiring must be brought into and terminated within the damper housing. For more detail → see pages 20 to 22, paragraph Assembly.

Actuator BELIMO BE 24-12(-ST), BE 230-12		
Actuator BELIMO - 40 Nm	**BE 24-12(-ST)**	**BE 230-12**
Power voltage	AC/DC 24 V 50/60Hz	AC 230 V 50/60Hz
Power consumption - in operation - in the end position	12 W 0,5 W	8 W 0,5 W
Dimensioning	18 VA (Imax 8,2 A @ 5 ms)	15 VA (Imax 7.9 A @ 5 ms)
Protection class	III	II
Degree of protection	IP 54	
Adjustment time for 95°	< 60 s	
Ambient temperature Storage temperature	-30°C … +55°C -40°C … +80°C	
Connection - drive - auxiliary switch	Cable 1 m, 3 x 0,75 mm^2 Cable 1 m, 6 x 0,75 mm^2 (BE 24-ST) with plug connectors	

GEN1 - MDCM and MDPM

- The MDCM damper control module is connected on a bi-directional communication loop back to a control panel, typically located at the FCC.
- Each MDCM has a 230v local spur to power the damper actuator.
- Max terminal size in MDCM and MDPM 2.5mm²
- Up to 96x MDCM's can be connected on one loop and multiple loops can be incorporated.
- With an MA or AA system the MDCM's are mounted in a fire rated and tested Ca-Si housing to BS EN1366-10.



Details of connection of the control module interfaces inside protection box → see page 21

160mm x 160mm x 62mm deep steel enclosure powder coated red - IP54

Communication and control module MDPM

- The MDPM damper control module is a combined control module and damper positioning module to provide a balanced/3RD position.
- It is connected on a bi-directional communication loop back to a control panel.
- Max terminal size in MDCM and MDPM 2.5mm²
- Each MDPM has a 230v local spur for powering the damper actuator, located at the FCC.
- Up to 96x MDPM's can be connected on one loop and multiple loops can be incorporated.
- With an MA or AA system the MDPM's are mounted in a fire rated and tested Ca-Si housing to BS EN1366-10.



Details of connection of the control module interfaces inside protection box → see page 21

230mm x 160mm x 62mm deep steel enclosure powder coated red - IP54

III. DIMENSIONS

Damper SEDS-L

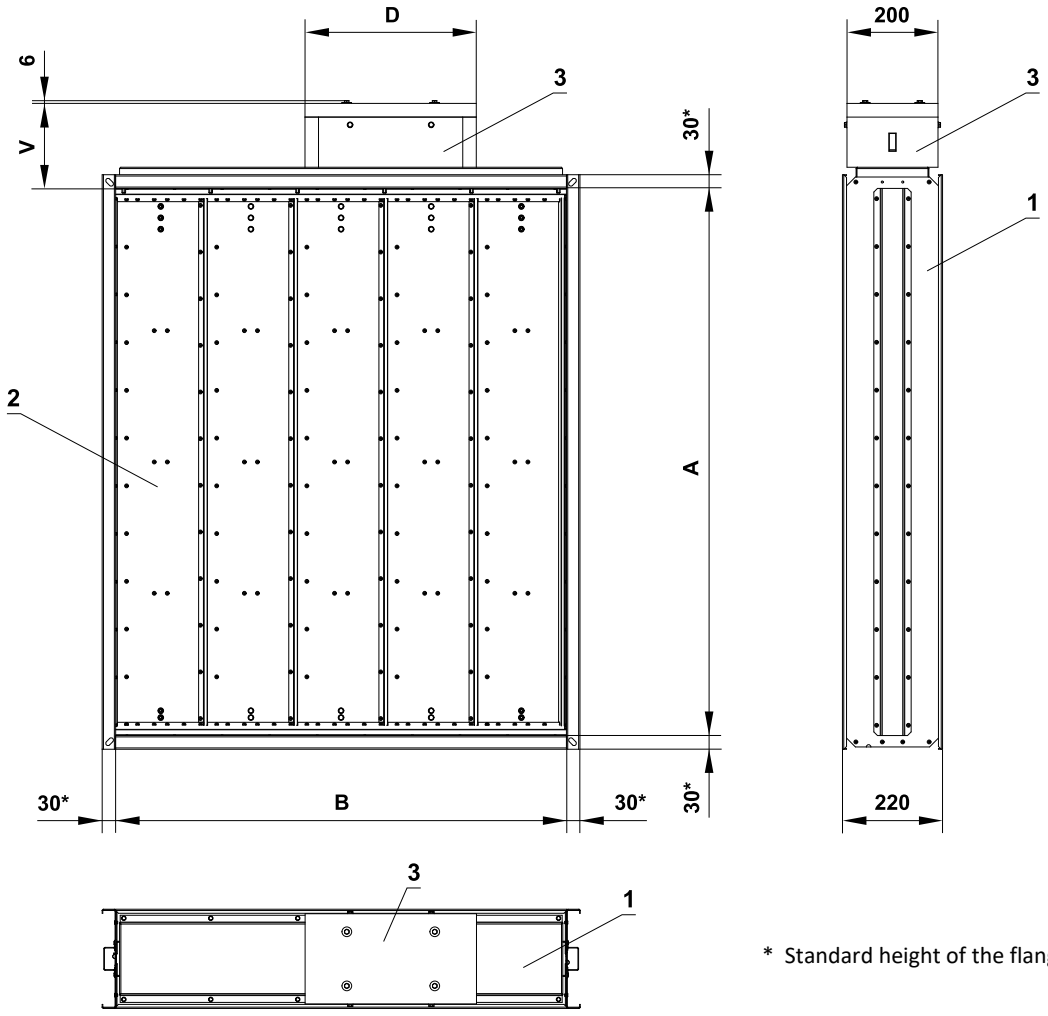

* Standard height of the flange

Actuating mechanism	V [mm]	D [mm]
BEN / BEE	176,5	315
BE	186,5	380

1 Damper body
2 Damper blade
3 Actuating mechanism cover

Flange with corner hole

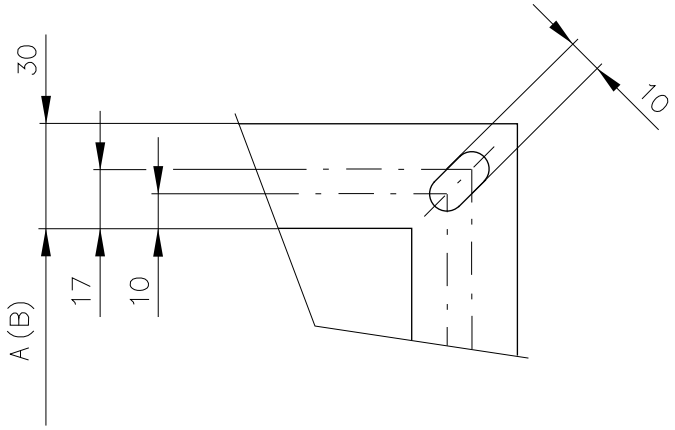

Flanges of dampers are 30 mm wide with oval hole.

Technical parameters

A x B [mm]		Number of blades	Weight [kg]	Free area S_f [m²]	Actuating mechanism type
200 x	200	1	13,4	0,0227	BELIMO BEN (15 N.m)
	250	2	15,6	0,0270	
	300	2	16,6	0,0350	
	350	2	17,6	0,0430	
	400	2	18,6	0,0510	
	450	3	20,7	0,0554	
	500	3	21,7	0,0634	
	600	3	23,7	0,0794	
	700	4	26,8	0,0917	
	800	4	28,8	0,1077	
	900	5	32,1	0,1200	BELIMO BEE (25 N.m)
	1000	5	34,1	0,1360	
	1100	6	37,1	0,1483	
	1200	6	39,2	0,1643	
250 x	200	1	14,2	0,0298	BELIMO BEN (15 N.m)
	250	2	16,6	0,0355	
	300	2	17,6	0,0460	
	350	2	18,7	0,0565	
	400	2	19,7	0,0670	
	450	3	22	0,0727	
	500	3	23	0,0832	
	600	3	25,1	0,1042	
	700	4	28,4	0,1203	
	800	4	30,5	0,1413	
	900	5	34	0,1575	BELIMO BEE (25 N.m)
	1000	5	36,2	0,1785	
	1100	6	39,4	0,1947	
	1200	6	41,5	0,2157	
300 x	200	1	15	0,0369	BELIMO BEN (15 N.m)
	250	2	17,5	0,0439	
	300	2	18,6	0,0569	
	350	2	19,8	0,0699	
	400	2	20,9	0,0829	
	450	3	23,2	0,0900	
	500	3	24,3	0,1030	
	600	3	26,6	0,1290	
	700	4	30,1	0,1490	
	800	4	32,3	0,1750	
	900	5	36	0,1950	BELIMO BEE (25 N.m)
	1000	5	38,2	0,2210	
	1100	6	41,7	0,2410	
	1200	6	43,9	0,2670	
350 x	200	1	15,8	0,0440	BELIMO BEN (15 N.m)
	250	2	18,5	0,0524	
	300	2	19,7	0,0679	
	350	2	20,8	0,0834	
	400	2	22	0,0989	
	450	3	24,5	0,1073	
	500	3	25,7	0,1228	
	600	3	28	0,1538	
	700	4	31,7	0,1776	
	800	4	34,1	0,2086	
	900	5	38	0,2325	BELIMO BEE (25 N.m)
	1000	5	40,3	0,2635	
	1100	6	44	0,2874	
	1200	6	46,4	0,3184	
400 x	200	1	16,6	0,0511	BELIMO BEN (15 N.m)
	250	2	19,5	0,0608	
	300	2	20,7	0,0788	
	350	2	21,9	0,0968	
	400	2	23,1	0,1148	
	450	3	25,8	0,1246	
	500	3	27	0,1426	
	600	3	29,5	0,1786	
	700	4	33,4	0,2063	
	800	4	35,8	0,2423	
	900	5	40	0,2700	BELIMO BEE (25 N.m)
	1000	5	42,4	0,3060	
	1100	6	46,3	0,3337	
	1200	6	48,8	0,3697	
450 x	200	1	17,4	0,0582	BELIMO BEN (15 N.m)
	250	2	20,4	0,0693	
	300	2	21,7	0,0898	
	350	2	23	0,1103	
	400	2	24,3	0,1308	
	450	3	27,1	0,1419	
	500	3	28,4	0,1624	
	600	3	30,9	0,2034	
	700	4	35,3	0,2349	BELIMO BEE (25 N.m)
	800	4	37,8	0,2759	
	900	5	42	0,3075	
	1000	5	44,5	0,3485	
	1100	6	48,6	0,3801	
	1200	6	51,2	0,4211	
500 x	200	1	18,2	0,0653	BELIMO BEN (15 N.m)
	250	2	21,4	0,0777	
	300	2	22,7	0,1007	
	350	2	24,1	0,1237	
	400	2	25,4	0,1467	
	450	3	28,4	0,1592	
	500	3	29,7	0,1822	
	600	3	32,4	0,2282	
	700	4	36,9	0,2636	BELIMO BEE (25 N.m)
	800	4	39,6	0,3096	
	900	5	43,9	0,3450	
	1000	5	46,6	0,3910	
	1100	6	50,9	0,4264	
	1200	6	56,5	0,4724	BELIMO BE (40 N.m)
600 x	200	1	19,9	0,0795	BELIMO BEN (15 N.m)
	250	2	23,3	0,0946	
	300	2	24,8	0,1226	
	350	2	26,2	0,1506	
	400	2	27,7	0,1786	
	450	3	31	0,1938	
	500	3	32,4	0,2218	
	600	3	35,3	0,2778	
	700	4	40,3	0,3209	BELIMO BEE (25 N.m)
	800	4	43,2	0,3769	
	900	5	47,9	0,4200	
	1000	5	50,8	0,4760	
	1100	6	58,5	0,5191	BELIMO BE (40 N.m)
	1200	6	61,4	0,5751	

A x B [mm]		Number of blades	Weight [kg]	Free area S_f [m^2]	Actuating mechanism type
700 x	200	1	21,5	0,0937	BELIMO BEN (15 N.m)
	250	2	25,3	0,1115	
	300	2	26,8	0,1445	
	350	2	28,4	0,1775	
	400	2	29,9	0,2105	
	450	3	33,6	0,2284	
	500	3	35,1	0,2614	
	600	3	38,2	0,3274	
	700	4	43,6	0,3782	BELIMO BEE (25 N.m)
	800	4	46,7	0,4442	
	900	5	51,9	0,4950	
	1000	5	57,9	0,5610	BELIMO BE (40 N.m)
	1100	6	63,1	0,6118	
	1200	6	66,2	0,6778	
800 x	200	1	23,1	0,1079	BELIMO BEN (15 N.m)
	250	2	27,2	0,1284	
	300	2	28,8	0,1664	
	350	2	30,5	0,2044	
	400	2	32,2	0,2424	
	450	3	36,1	0,2630	
	500	3	37,8	0,3010	
	600	3	41,1	0,3770	
	700	4	46,9	0,4355	BELIMO BEE (25 N.m)
	800	4	50,3	0,5115	
	900	5	58,8	0,5700	BELIMO BE (40 N.m)
	1000	5	62,1	0,6460	
	1100	6	67,7	0,7045	
	1200	6	71,1	0,7805	
900 x	200	1	24,7	0,1221	BELIMO BEN (15 N.m)
	250	2	29,1	0,1453	
	300	2	30,9	0,1883	
	350	2	32,7	0,2313	
	400	2	34,5	0,2743	
	450	3	38,7	0,2976	
	500	3	40,5	0,3406	
	600	3	44,3	0,4266	BELIMO BEE (25 N.m)
	700	4	50,3	0,4928	
	800	4	56,8	0,5788	BELIMO BE (40 N.m)
	900	5	62,8	0,6450	
	1000	5	66,3	0,7310	
	1100	6	72,4	0,7972	
	1200	6	75,9	0,8832	

A x B [mm]		Number of blades	Weight [kg]	Free area S_f [m^2]	Actuating mechanism type
1000 x	200	1	26,4	0,1363	BELIMO BEN (15 N.m)
	250	2	31,1	0,1622	
	300	2	32,9	0,2102	
	350	2	34,9	0,2582	
	400	2	36,7	0,3062	
	450	3	41,3	0,3322	
	500	3	43,2	0,3802	
	600	3	47,2	0,4762	BELIMO BEE (25 N.m)
	700	4	56,5	0,5501	BELIMO BE (40 N.m)
	800	4	60,3	0,6461	
	900	5	66,8	0,7200	
	1000	5	70,5	0,8160	
	1100	6	77	0,8899	
	1200	6	80,8	0,9859	
1100 x	200	1	28	0,1505	BELIMO BEN (15 N.m)
	250	2	33	0,1791	
	300	2	35	0,2321	
	350	2	37	0,2851	
	400	2	39	0,3381	
	450	3	44,1	0,3668	BELIMO BEE (25 N.m)
	500	3	46,1	0,4198	
	600	3	50,1	0,5258	
	700	4	59,9	0,6074	BELIMO BE (40 N.m)
	800	4	63,9	0,7134	
	900	5	70,7	0,7950	
	1000	5	74,7	0,9010	
	1100	6	81,6	0,9826	
	1200	6	85,6	1,0886	
1200 x	200	1	29,6	0,1647	BELIMO BEN (15 N.m)
	250	2	34,9	0,1960	
	300	2	37	0,2540	
	350	2	39,2	0,3120	
	400	2	41,2	0,3700	
	450	3	46,7	0,4014	BELIMO BEE (25 N.m)
	500	3	48,8	0,4594	
	600	3	55,9	0,5754	BELIMO BE (40 N.m)
	700	4	63,2	0,6647	
	800	4	67,4	0,7807	
	900	5	74,7	0,8700	
	1000	5	78,9	0,9860	
	1100	6	86,2	1,0753	
	1200	6	90,5	1,1913	

IV. INSTALLATION

Placement and installation

- Dampers single are designed to remove heat and combustion products (e.g. smoke) from single fire compartment according BS EN 12101-8.
- Dampers are designed for installation with horizontal or vertical axis of the blades.
- Connecting smoke exhaust duct has to be hung or supported so as all load transfer from the connecting smoke exhaust duct to the damper is absolutely excluded.
- To provide needed access space to the control device, all other objects must be situated at least 350 mm from the control parts of the damper.
- During installation the damper blades must be in position “CLOSED”. The damper body should not be deformed in the course of installation.
- Once the damper is built in, its blade should move freely and not rub against the body of the damper during operation.

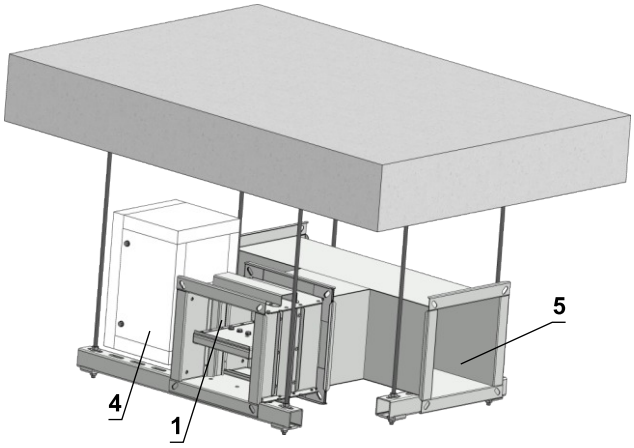

- The dampers and duct must be suspended separately.
- Duct from BS EN 12101-7 in Steel
- Details of connection to duct → see page 15

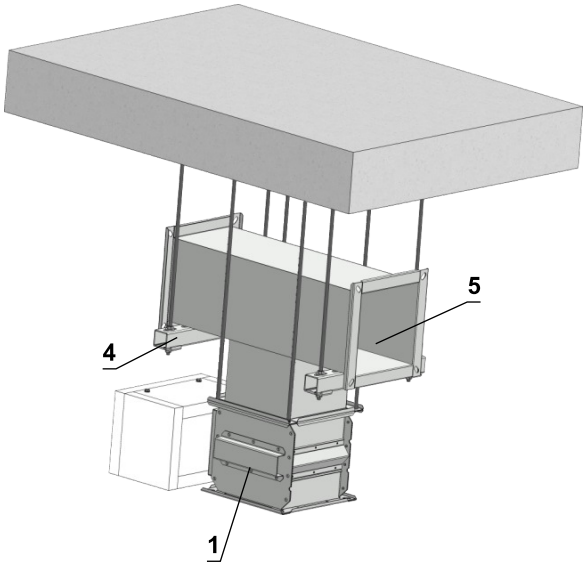

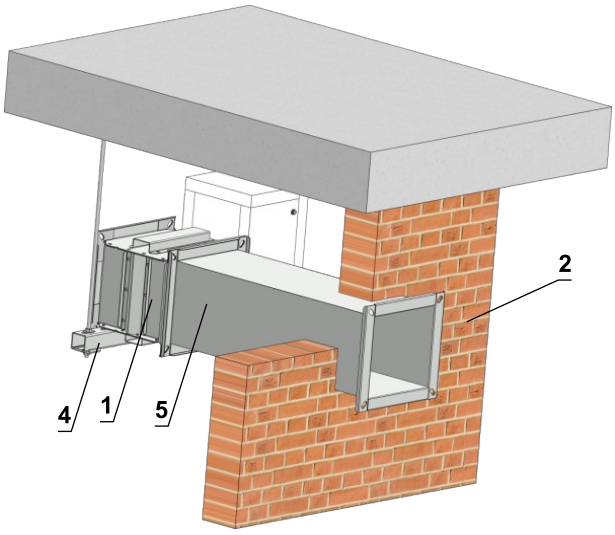

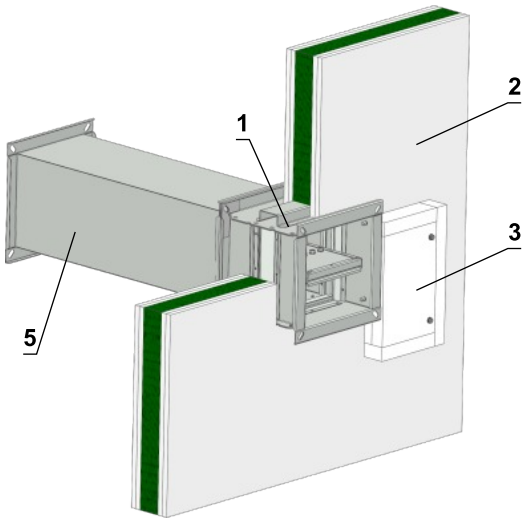

1 SEDS-L
2 Wall construction without fire resistance
3 Atypical protection box with access to actuator from side, not as standard from the top
4 Fixing profile with threaded rod → see pages 13 to 14
5 Duct

V. SUSPENSION SYSTEMS

Mounting to the ceiling wall

- The dampers must be suspended using threaded rods and mounting profiles. Their dimensioning depends on the damper's weight.
- The dampers and duct must be suspended separately.
- The connected duct must be suspended in such a way that the transfer of all loads from the adjoining ventilation duct to the damper body is completely excluded. Adjacent duct must be suspended or supported, as required by the duct suppliers.
- Threaded rods longer than 1,5 m must be protected by fire insulation.

Possible examples of anchoring to the ceiling construction
Follow the instructions of fixing specialist or installation company

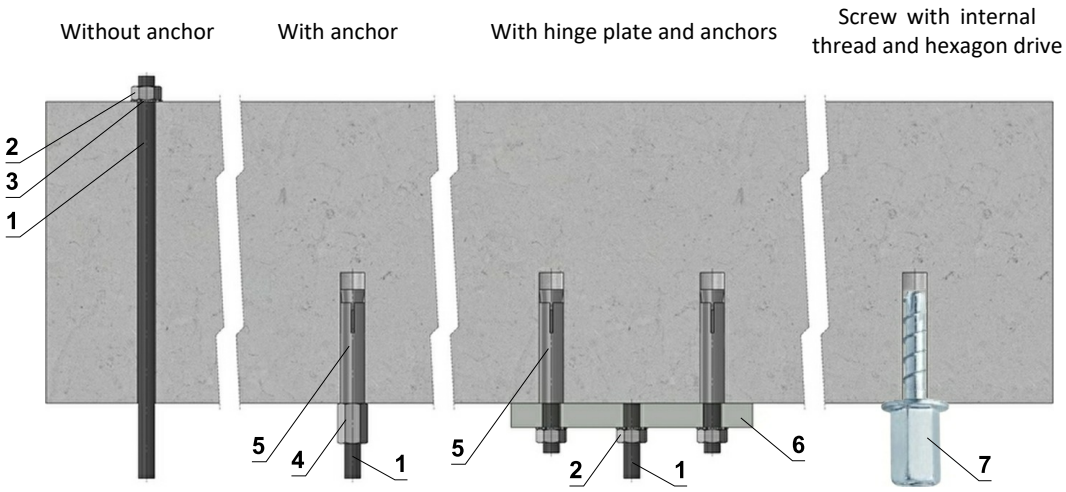

Hinge plates

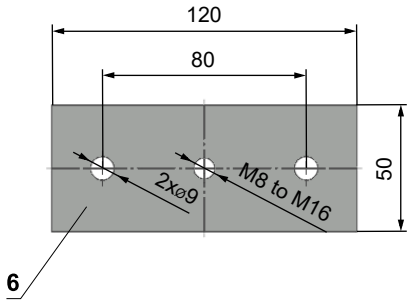

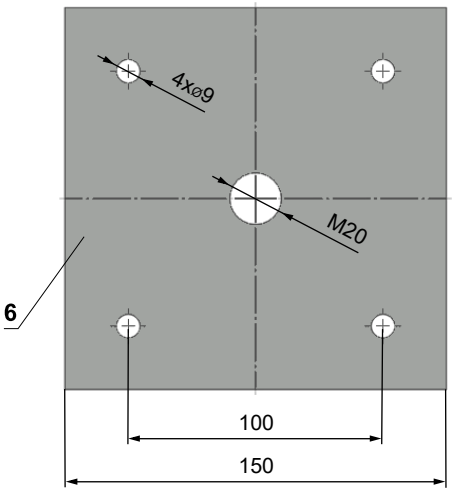

- If in doubt then always consult a specialist anchor engineer such as Halfen or Hilti.

1 Threaded rod M8 - M20
2 Nut M8 - M20
3 Washer for M8 - M20
4 Coupling Nut M8 - M20
5 Anchor
6 Hinge plate - min. thickness 10 mm
7 Concrete screw tested for fire resistance R30-R90, max. Tension up to 0.75 KN (length 35 mm)

Load capacities of threaded rods at the required fire resistance 60 min. < t ≤ 120 min.

Size	As [mm²]	Weight [kg]	
		for 1 rod	for 2 rods
M8	36,6	22	44
M10	58	35	70
M12	84,3	52	104
M16	157	96	192
M18	192	117	234
M20	245	150	300

Example of placing of mounting profiles HILTI

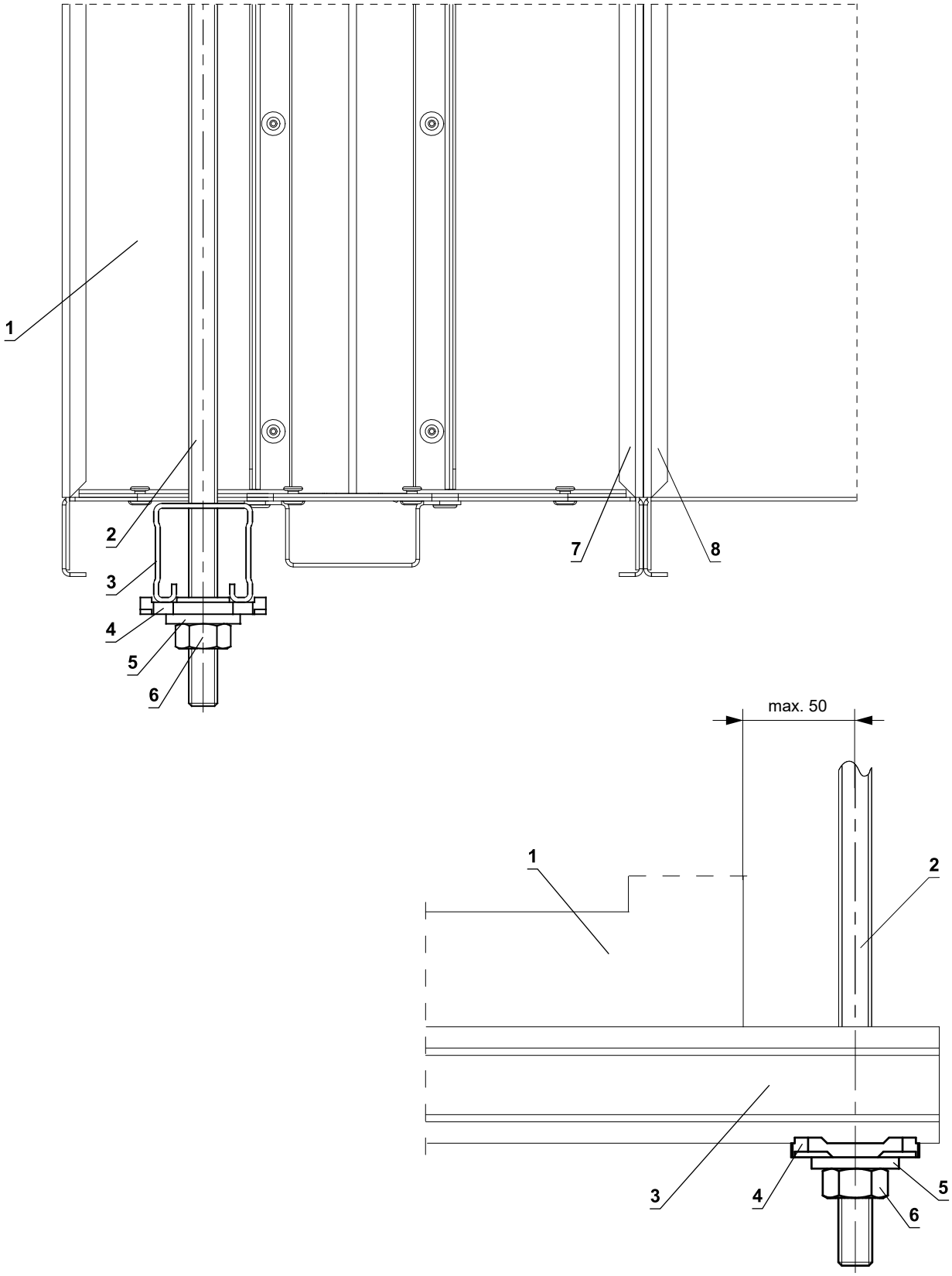

1 SEDS-L
2 Threaded rod M8 - M12
3 Support HILTI MQ-41 or MQ-41/3
4 Bored plate HILTI MQZ-L
5 Washer for M8 - M12
6 Nut M8 - M12
7 Flange of SEDS-L
8 Flange of duct

Example of duct connection

Flange connection

Connection to smoke extract duct

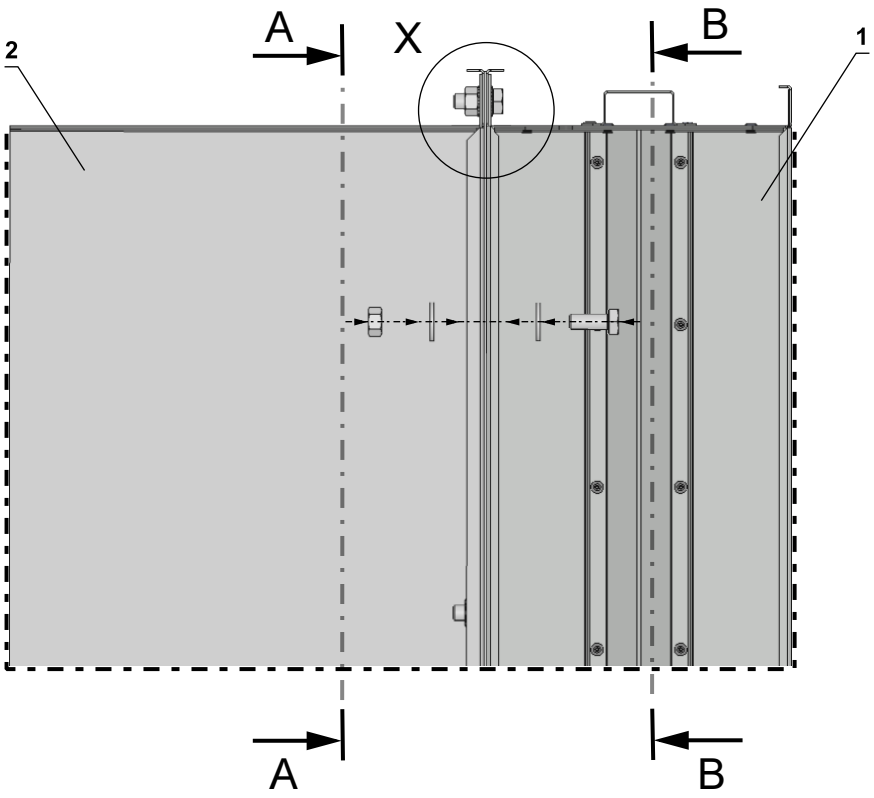

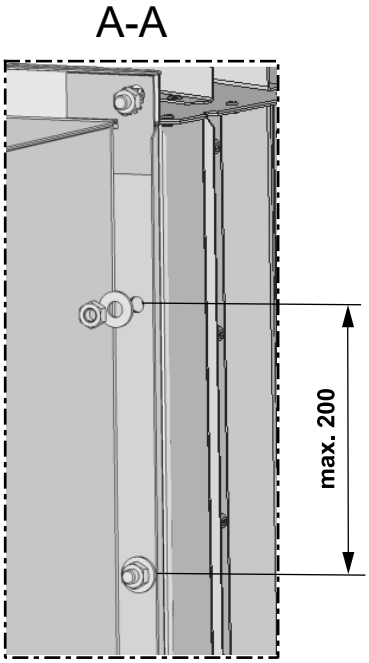

Electrically conductive connection

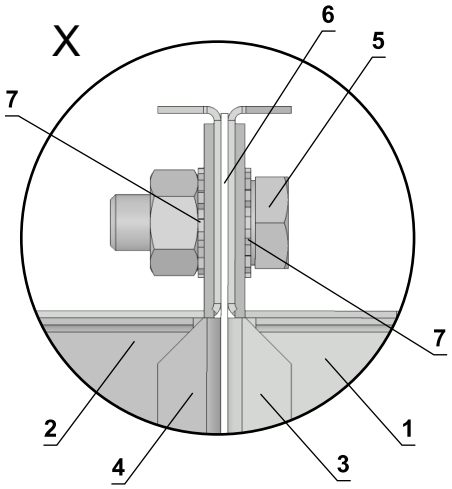

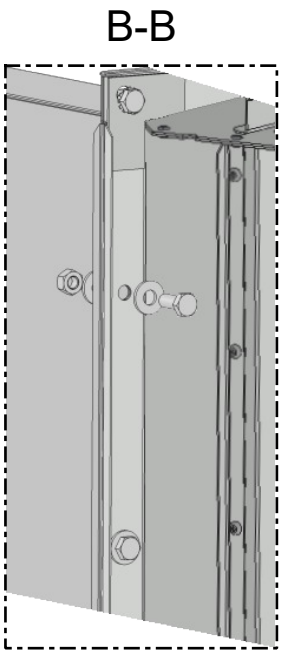

1 SEDS-L
2 Connecting air duct
3 Flange of SEDS-L
4 Flange of duct
5 M8 bolt assembly (bolt M8x20 mm, 2 pcs large washer M8, nut M8) *
6 Ceramic self-adhesive tape (FJ 120 Pyrosil B 170-250 kg/m^3 - Tremco-illbruck) or equivalent
7 Lock washers

* min. one connection must be electrically conductive

VI. ACCESSORIES

Cover grille KMM

- The grilles type KMM (TPM 002/96) can be used to close smoke control dampers.
- These grilles are available in all sizes of the smoke control dampers.
- Free area value for KMM is 78%.

SEDS-L with cover grille

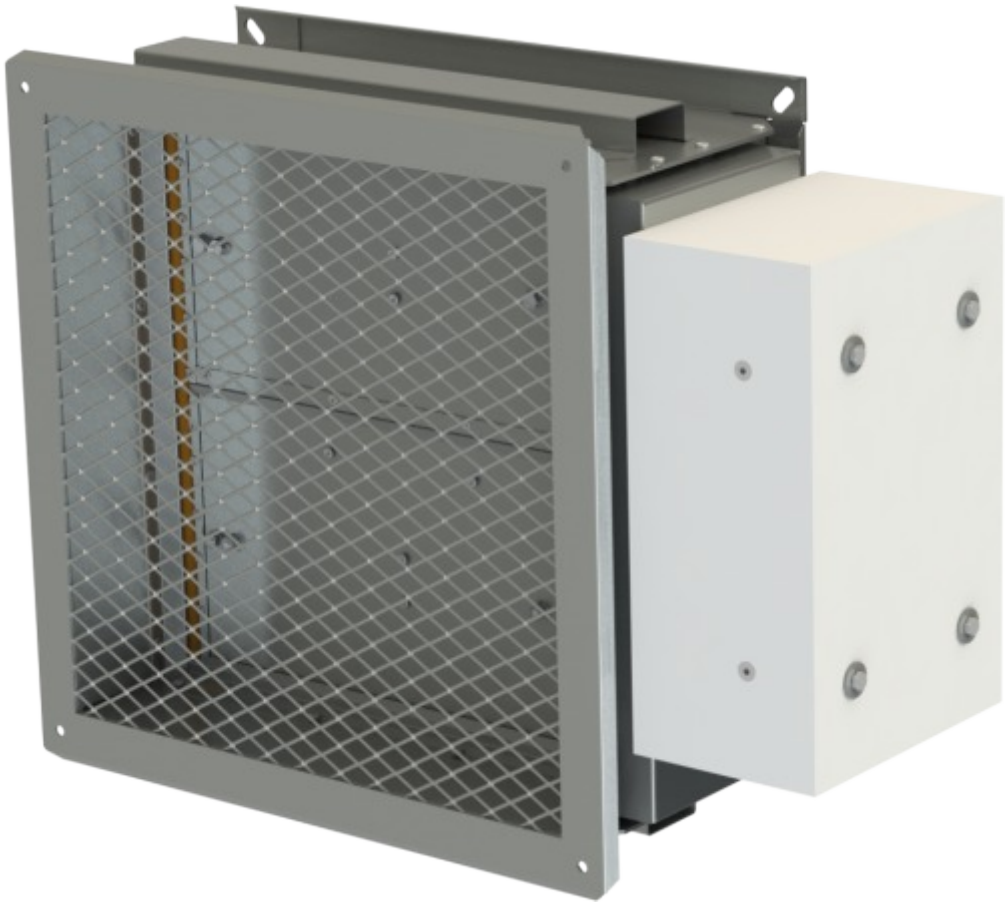

VII. TECHNICAL DATA

Pressure loss

Determination of pressure loss by using diagram ρ = 1,2 kg/m³

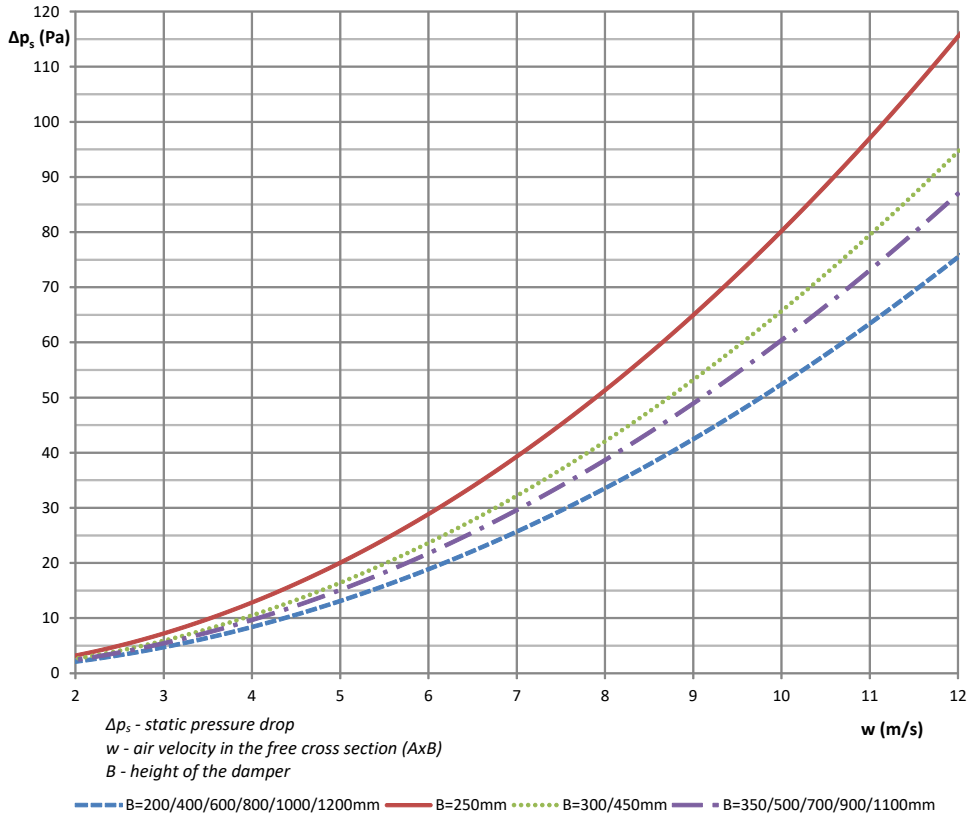

Noise data - level of acoustic output corrected with filter A

Sound power level Lw in dB(A) for B=250/300/450mm, damper fully open

	f (Hz)	63	125	250	500	1000	2000	4000	8000	Total
w (m/s)	2	16	24	29	29	28	26	23	9	**35**
	3	25	33	38	38	37	35	32	18	**44**
	4	32	40	45	45	44	42	39	25	**51**
	5	38	46	51	51	50	48	45	31	**57**
	6	42	50	55	55	54	52	49	35	**61**
	7	46	54	59	59	58	56	53	39	**65**
	8	49	57	62	62	61	59	56	42	**68**
	9	50	58	63	63	62	60	57	43	**69**
	10	53	61	66	66	65	63	60	46	**72**
	11	55	63	68	68	67	65	62	48	**74**
	12	57	65	70	70	69	67	64	50	**76**

w - air velocity in the free cross section (AxB) - i.e. before blades
f - frequency of octave band

Sound power level Lw in dB(A) for B=350/500/700/900/1100mm, damper fully open

	f (Hz)	63	125	250	500	1000	2000	4000	8000	Total
w (m/s)	2	15	23	28	28	27	25	22	8	**34**
	3	24	32	37	37	36	34	31	17	**43**
	4	31	39	44	44	43	41	38	24	**50**
	5	36	44	49	49	48	46	43	29	**55**
	6	41	49	54	54	53	51	48	34	**60**
	7	45	53	58	58	57	55	52	38	**64**
	8	48	56	61	61	60	58	55	41	**67**
	9	49	57	62	62	61	59	56	42	**68**
	10	51	59	64	64	63	61	58	44	**70**
	11	53	61	66	66	65	63	60	46	**72**
	12	55	63	68	68	67	65	62	48	**74**

w - air velocity in the free cross section (AxB) - i.e. before blades
f - frequency of octave band

Sound power level Lw in dB(A) for B=200/400/600/800/1000/1200mm, damper fully open

	f (Hz)	63	125	250	500	1000	2000	4000	8000	Total
w (m/s)	2	13	21	26	26	25	23	20	6	**32**
	3	21	29	34	34	33	31	28	14	**40**
	4	28	36	41	41	40	38	35	21	**47**
	5	34	42	47	47	46	44	41	27	**53**
	6	38	46	51	51	50	48	45	31	**57**
	7	42	50	55	55	54	52	49	35	**61**
	8	45	53	58	58	57	55	52	38	**64**
	9	47	55	60	60	59	57	54	40	**66**
	10	48	56	61	61	60	58	55	41	**67**
	11	50	58	63	63	62	60	57	43	**69**
	12	52	60	65	65	64	62	59	45	**71**

w - air velocity in the free cross section (AxB) - i.e. before blades
f - frequency of octave band

VIII. MATERIAL, FINISHING

- Damper casing and damper blade are made of galvanized sheet metal without any other surface finish.
- Fasteners are galvanized.

  Any other requirements for the design shall be considered atypical and shall be addressed on an individual basis.
- The actuator cover is made of fire-resistant material (fire protection board).

IX. TRANSPORTATION AND STORAGE

Logistic terms

- Dampers are delivered on pallets. As standard, the dampers are wrapped in plastic foil for protection during transport and must not be used for long-term storage of the equipment . Changes in temperature during transport may cause condensation of water vapour inside the packaging and thereby condisitions may arise inside the packaging that are suitable for corrosion of materials used in the equipment (e.g. white corrosion on zinc-coated items or mould on calcium silicate). Therefore, it is necessary to remove the transport packaging immediately after unloading to allow air to circulate around the product.
- The equipment must be stored in a clean, dry, well ventilated and dust-free environment out of direct sunlight. To ensure protection against moisture and extremes of temperatures (minimum temperature +5°C) the equipment must be protected against mechanical and accidental damage prior to installation.
- Another required packaging system should be approved and agreed by the manufacturer. Packaging material is not returnable in case that another packaging system (material) is required and used and it is not included in the final price of damper.
- Appropriate handling equipment (e.g. forklifts) must be used for unloading and further handling of the damper due to its weight. Dampers are fragile.
- Dampers are transported by box freight vehicles without direct weather impact, there must not occur any shocks and ambient temperature must not exceed +50°C. Dampers must be protected against impact when transported and manipulated. During transportation, the damper blade must be in the "CLOSED" position.
- Dampers are stored indoors in an environment without any aggressive vapours, gases or dust. Indoor temperature must be in the range from -30°C to +50°C and maximum relative humidity 95% (avoid condensation on the damper body). Dampers must be protected against impact when transported and manipulated.

X. ASSEMBLY, ATTENDANCE AND MAINTENANCE

- Assembly, maintenance and damper function check can be done only by qualified and trained person, i.e. “AUTHORIZED PERSON” according to the manufacturer documentation. All works done on the smoke control dampers must be done according international and local norms and laws.
- All effective safety standards and directives must be obse-rved during damper assembly.
- To ensure reliable smoke control damper function it is necessary to avoid blocking the closing mechanism and contact surfaces with collected dust, fibre and sticky materials and solvents.

- Manual operation
  - Without power supply, the damper can be operated manually and fixed in any required position.

DANGER OF DAMAGE

Always:

REMOVE POWER BEFORE USING ALLEN KEY!
NEVER USE A POWER TOOL!

Both incorrect operations will damage the clutch Mechanism
NO WARRANTY CLAIM!

Electrical connection of the actuator in protection box

Protection box without slot or predrilled holes

- Drill two holes into the protection box (from outside to inside) and pull through field wiring cables (CAT 3 fire resistant cables as BS 8519) to connect to the actuator trailing lead inside the housing, using a standard screwed cable connector block, the protection box is made of calcium silicate plates.
- Procedure
  - Use drill (drill size acc. To suit connecting cable Ø + 2 mm for seal up by mastic) and make two holes. It is possible to drill holes in any side of the housing.
  - Pull the heat resistant cable through the calcium silicate plate (wall) and connect with cables from actuator acc. to above mentioned electrical diagram.
  - Seal up the space around cable with fire resistant mastic (HILTI CFS-S ACR, PROMASTOP) or equivalent.
  - Let the mastic harden.

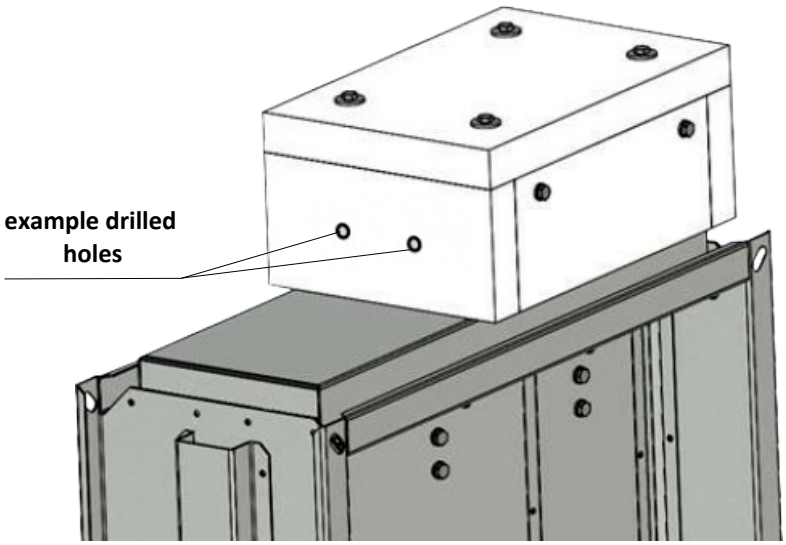

Example of position of holes in the wall of the box, without pre-manufactured slot

Connection of the control module MDPM & MDCM interfaces inside protection box

- Drill holes into the protection box (from outside to inside) and pull through field wiring cable (fire resistant cables) to connect control module. Protection box is made of calcium silicate insulating plates.
- Procedure:
  - Screw red box of MDPM/MDCM interface inside of the FIRE RATED housing to the back side, use pre drilled holes in red box and self-taping screws 4,8x25 mm. Minimum distance from walls 20 mm.
  - Use drill (drill size acc. to suit connecting cable Ø + 2 mm for seal up by mastic) and make holes (min. pitch of the holes must be 30 mm), number of holes depends on the type of control module. **It is possible to drill holes in any side of the protection box.**
  - Pull the heat resistant cable through the calcium silicate insulating plate (wall) and connect with cables from control module.
  - Seal up the space around cable with fire resistant mastic (HILTI CFS-S ACR, PROMASTOP) or equivalent.
  - Let the mastic harden.
- Placement:
  - The FIRE RATED housing can be installed onto a wall.
  - For installation, drill 4 holes in the rear of the housing (from inside to outside) with a maximum hole diameter of 8,5mm, use fixing appropriate for the application. Seal all holes and gap between FIRE RATED housing and wall with firestop (HILTI CFS-S ACR, PROMASTOP).

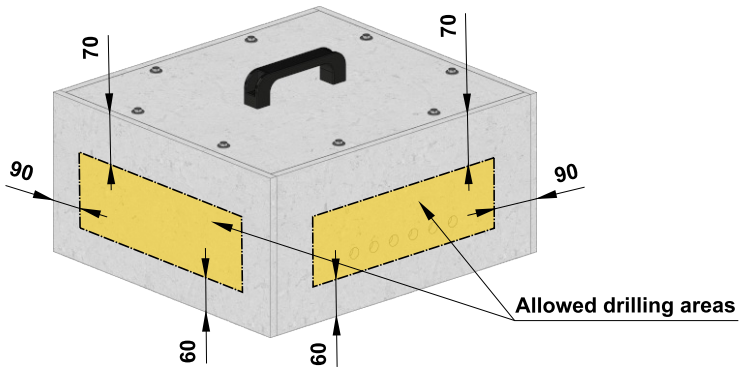

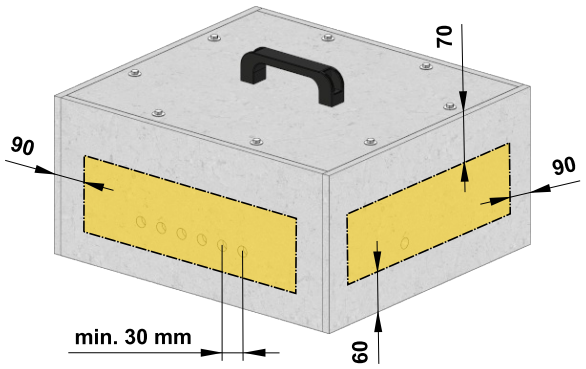

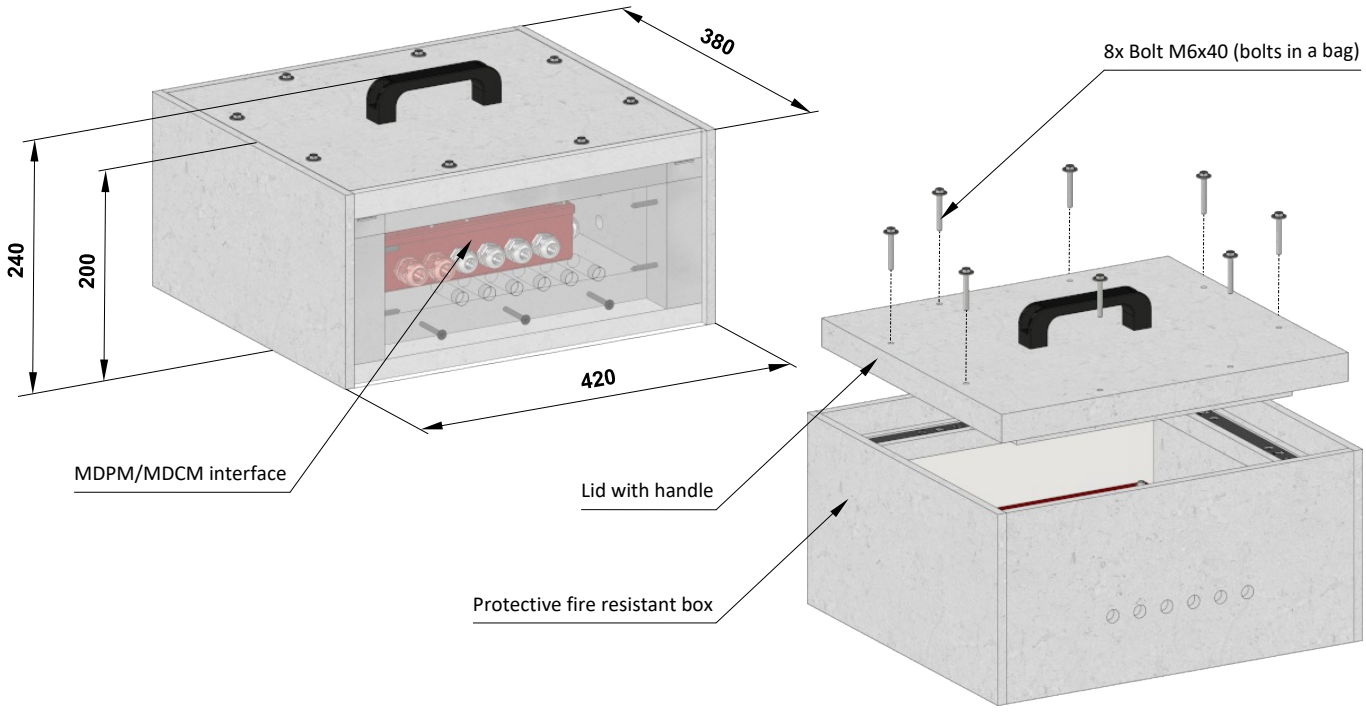

Entry into service and revisions

- Before entering the dampers into operation after assembly and after sequential revisions, checks and functionality tests of all designs including operation of the electrical components must be successfully provided and finished. After entering into operation, these revisions must be done according to requirement set by national regulations. Maintenance should be completed in line with national standards (such as BS 9999 and BS 7346-8), maintenance intervals should be in line with these standards or not exceeding 6 months (as EN 12101-8)
- In case that dampers are found unable to serve for their function for any cause, it must be clearly marked. The operator is obliged to ensure that the damper is put into condition in which it is ready for function and meanwhile he is obliged to provide the fire protection by another appropriate way.
- Results of regular checks, imperfections found and all-important facts connected with the damper function must be recorded in the "FIRE BOOK" and immediately reported to the operator.
- Before entering the dampers into operation after their assembly and by sequential checks, the following checks must be carried out for all designs.
- Visual inspection of proper damper integration, inside damper area, damper blade, contact surfaces and silicon sealing.
- Check of damper blade displacement can be realize after actuating mechanism supply connection or signal connection from higher level control systems. Blade displacement from position “OPEN” to position “CLOSED” and return displacement is checked.

XI. ORDERING INFORMATION

Ordering key

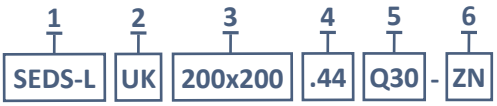

EXAMPLE:

SEDS-L UK 200x200 .44 Q30-ZN
Smoke control damper SEDS-L, dimension 200x200 mm, control design with Drive open/Drive closed AC 230 V, flange width 30 mm, galvanized material variant.

1| Smoke control damper type - SEDS-L

2| Country of destination

3| Damper dimensions A x B → see pages 10 to 11
"A" is the width of the damper
"B" is the height of the damper

4| Damper design

.44	With actuating mechanism BEN, BEE, BE for 230V
.54	With actuating mechanism BEN, BEE, BE for 24V
.65*	With actuating mechanism BEN (BEE)-SR for 24V

** Design .65 is not available by using actuating mechanism BE*

5| Flange dimension

Q30	Flange width 30 mm

6| Material

ZN	Galvanized

Data label

- Data label is placed on the damper casing (example)





The producer reserves the right for innovations of the product.
For actual product information see www.mandik.co.uk

MANDÍK®

www.mandik.co.uk



Manufacturer
MANDÍK, a.s. • Dobříšská 550 • 267 24 Hostomice • Czech Republic • Tel.: +420 311 706 742 • E-Mail: mandik@mandik.cz

Authorized representative
Mandik UK Limited • 210 Park Avenue • Aztec West • Bristol BS32 4SY • United Kingdom • Tel.: +44 117 4526376 • E-Mail: help@mandik.co.uk