MANDÍK

TPM 085/12
Version 2026-10-16

RPM-V

Circular variable airflow regulator

Technical Documentation
Installation, Commissioning, Operation, Maintenance and Service Manual

MANDÍK®
www.mandik.com

MANDÍK, a.s. • Dobříšská 550 • 267 24 Hostomice • Czech Republic • Tel.: +420 311 706 742 • E-Mail: mandik@mandik.cz

These technical specifications state a row of manufactured sizes and models of air volume controller (further only controller) RPM-V. It is valid for production, designing, ordering, delivery, assembly and operation.

I. CONTENT

II. GENERAL INFORMATION **3**

1. Description..... 3
2. Design..... 4
3. Dimensions, weights..... 16
4. Placement and Assembly..... 19

III. TECHNICAL DATA **20**

5. Basic parameters..... 20
6. Determination of actual air volume..... 21
7. Pressure loss..... 21
8. Noise data..... 21

IV. VENTILATION SYSTEMS **37**

9. Ventilation systems with controllers RPM-V..... 37

V. MATERIAL, FINISHING **38**

10. Material..... 38

VI. INSPECTION, TESTING **38**

11. Inspection, testing..... 38

VII. TRANSPORTATION AND STORAGE **38**

12. Logistic terms..... 38

VIII. ASSEMBLY, ATTENDANCE, MAINTENANCE AND REVISIONS **39**

13. Assembly and set up..... 39

IX. ORDERING INFORMATION **40**

14. Ordering key..... 40

II. GENERAL INFORMATION

1. Description

1.1. The air volume controllers are meant for systems with a variable air volume that is used for input or output air. The required amount of air that is taken into the individual rooms or working areas is variable with respect to time and can be changed according to momentary need when the controllers are installed. Total power of air-conditioning system can be lower. This variable systems enable a more economical operation air-conditioning systems and while ensuring individual well-being on the premises setting.

The controller consists of the body of the controller with a control blade and pressure probes for determining the through-flow of air. An compact controller is affixed to the body for controlling the control blade.

Fig. 1 Controller RPM-V Belimo

Fig. 2 Controller RPM-V MANDÍK PROFI-LINE (actuating mechanism Gruner)

1.2. Controller characteristics

- Type of regulation:
  - control of air flow
  - control of pressure in the duct
  - control of pressure in the room

● Nominal size	DN 80 ÷ DN 630
● Length	L = 450 / 600 mm according to nominal size
● Tightness acc. to EN 1751	External casing leakage class ATC 3 (old marking “C“) Tightness through the damper blade: class 4
● Air flow volume	18 ÷ 7 900 m³/h (for 12m/s is max. Air flow vol. 13 500 m³/h*)
● Accuracy	± 8 % for velocity up to 3 m/s and ± 5 % for higher velocity.
● Air-velocity	Standard set-up is in range from min. 1 m/s to 7 m/s by Belimo, Gruner or Siemens actuators, see in 5.1.1.

1.3. Working conditions

The faultless functioning of the controllers is ensured under the following conditions:
a) maximum speed of air flow 7 m/s*
b) maximum pressure in the duct 1000 Pa
c) the air circulation in the whole controller section must be secured as steady on whole surface - see point 4.1.

Controllers are designed for macroclimatic areas with mild climate according to EN 60 721-3-3.

Controllers are suitable for systems without abrasive, chemical and adhesive particles.

Temperature in the place of installation is permitted to range from 0°C to +50°C.

The controllers are supplied without insulation or in an insulated design. Insulation thickness is 50 mm.

*** Set the controller to 12 m/s, it is necessary to discuss with the manufacturer!**

2. Design

Fig. 3 Air flow control

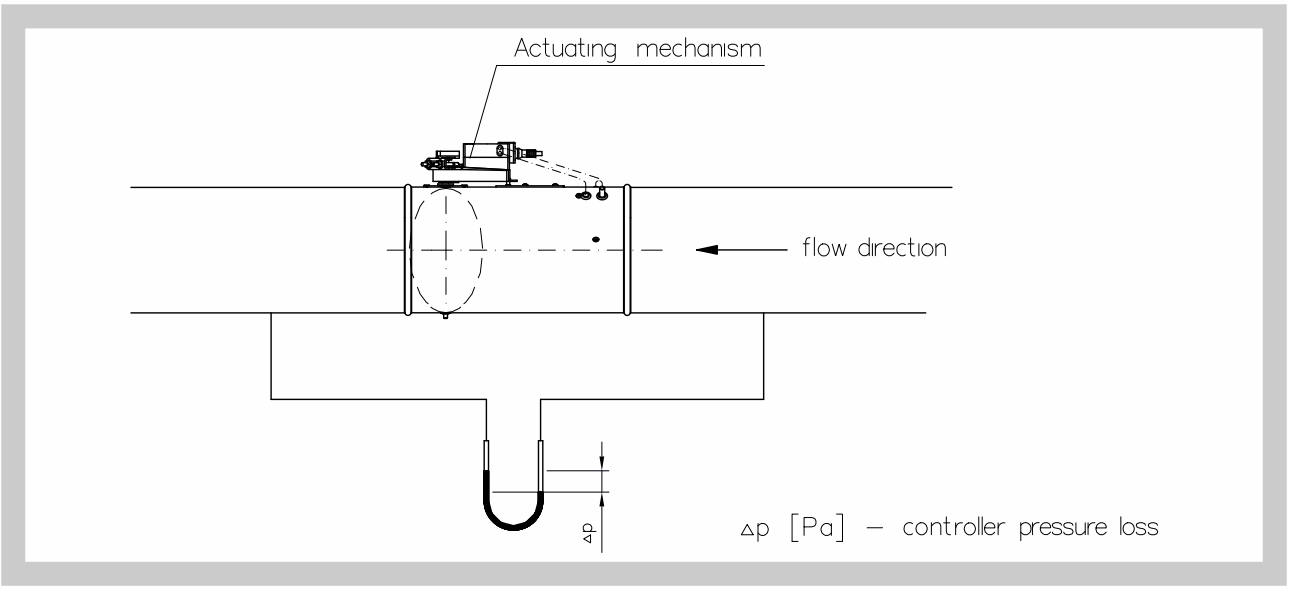

Fig. 4 Pipe pressure control

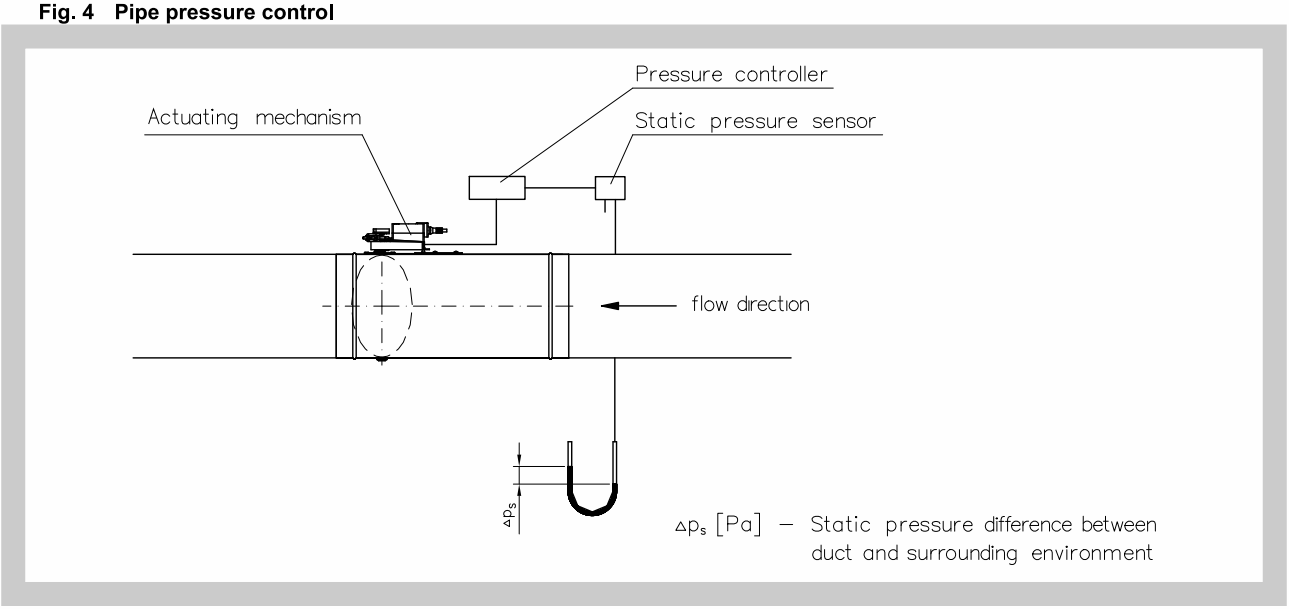

Fig. 5 Room pressure control

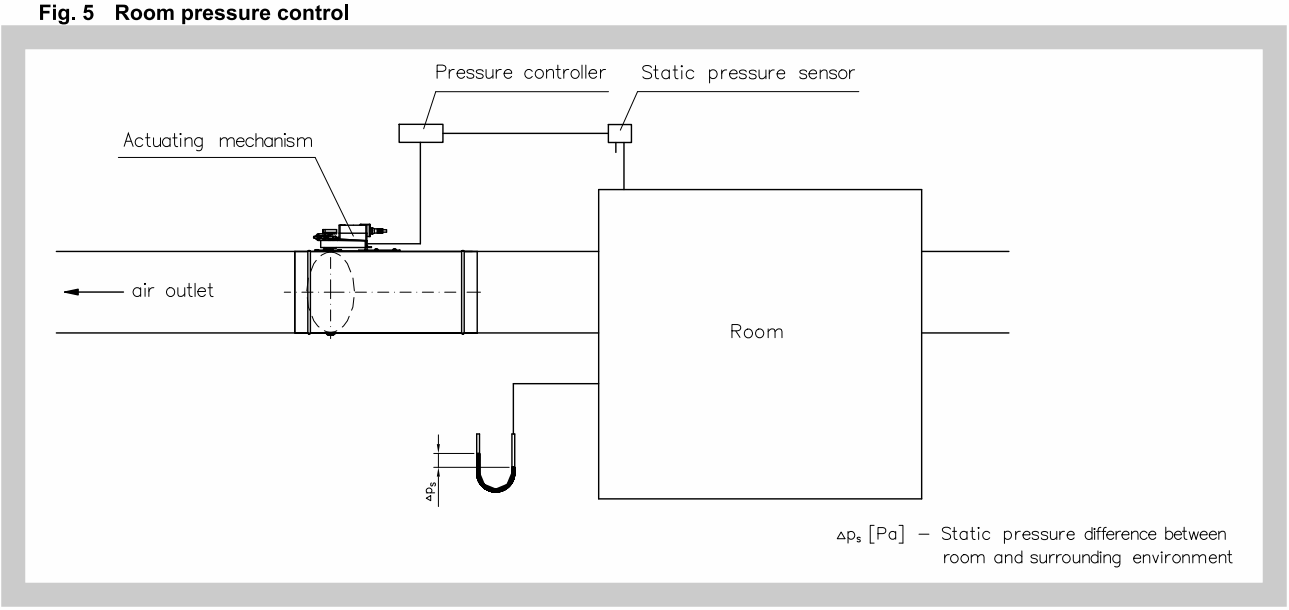

2.1. Compact regulator BELIMO - Air flow regulator

A pressure sensor, digital VAV controller and damper actuator all in one, providing a compact solution with a different communication possibilities.

The regulator is used for regulation of air flow, it works on the principle of dynamic measurement. It compares the measured differential pressure with the set point, in case of deviation it rotates the damper blade until the set point is reached.

Regulators are divided in accordance with the type of control:

- LMV-D3-MP, NMV-D3-MP and SMV-D3-MP for control with signal 0(2)…10 V or protocol MP-BUS
- LMV-D3-MF.1 MDK* and NMV-D3-MF.1 MDK* for control with signal 0(2)…10 V
- LMV-D3-MOD and NMV-D3-MOD for control with signal 0(2)…10 V or using the protocol Modbus RTU, BACnet or MP-BUS
- LMV-D3-KNX and NMV-D3-KNX for control with signal 0(2)…10 V or using protocol KNX

Fig. 6 Regulator LMV-D3-MP, NMV-D3-MP, SMV-D3-MP, LMV-D3-MF.1 MDK* and NMV-D3-MF.1 MDK*

No.	Designation	Color of wire	Function
1	⊥ –	black	AC/DC 24 V
2	~ +	red	
3	Y	white	Control signal
5	U	orange	- Actual signal value - MP-BUS connection

Fig. 7 Air flow control with LMV-D3-MP, NMV-D3-MP, SMV-D3-MP, LMV-D3-MF.1 MDK* and NMV-D3-MF.1 MDK*

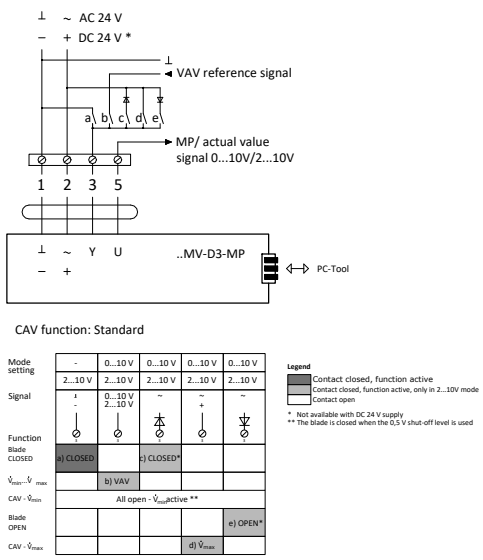

Fig. 8 Master-slave flow control with actuators LMV-D3-MP, NMV-D3-MP, SMV-D3-MP, LMV-D3-MF.1 MDK* and NMV-D3-MF.1 MDK*

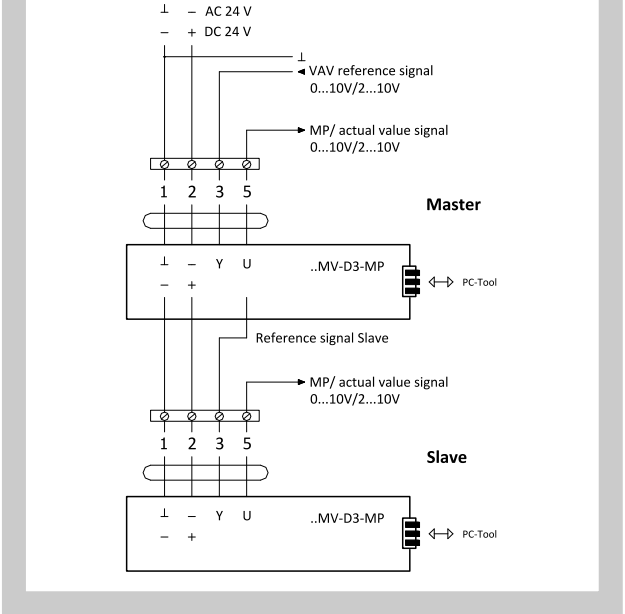

*** MP-BUS protocol and service plug are not available**

Fig. 9 Actuators LMV-D3-MOD, NMV-D3-MOD and SMV-D3-MOD

No.	Designation	Color of wire	Function
1	⊥ −	black	AC/DC 24 V
2	~ +	red	
3			
5	► MFT	orange	MP connection
6	D-	pink	BACnet/Modbus RTU connection (RS-485)
7	D+	grey	

Fig. 10 Wiring of LMV-D3-MOD, NMV-D3-MOD and SMV-D3-MOD on the serial line RS-485

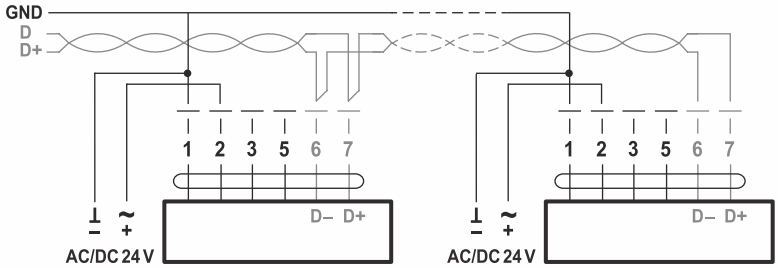

Fig. 11 Actuators LMV-D3-KNX, NMV-D3-KNX

No.	Designation	Color of wire	Function
1	⊥ −	black	AC/DC 24 V
2	~ +	red	
3			
5	► MFT	orange	PP connection

Fig. 12 Wiring of actuators LMV-D3-KNX and NMV-D3-KNX

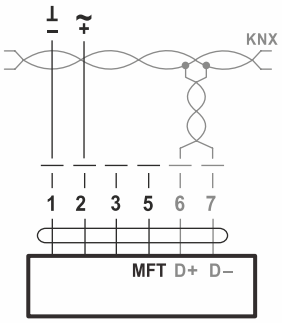

Tab. 2.1.1. Technical parameters of actuators LMV-D3-MF.1 MDK/MP/MOD/KNX, NMV-D3-MF.1 MDK/MP/MOD/KNX and SMV-D3-MP/MOD

VAV-Regulator	**LMV-D3-…**				**NMV-D3-…**				**SMV-D3-…**	
Communication	**MF**	**MP**	**MOD**	**KNX**	**MF**	**MP**	**MOD**	**KNX**	**MP**	**MOD**
Power voltage	AC/DC 24 V, 50/60 Hz									
Functional range	AC 19,2…28,8 V / DC 21,6…28,8 V									
Dimensioning	3,5 VA		4 VA		5 VA				5,5 VA	
	(max. 8 A @ 5 ms)									
Power input	2 W				3 W				3 W	
Torque	5 Nm				10 Nm				20 Nm	
Adjustment ranges										
$\mathring{V}_{nom}$	OEM specific nominal volumetric flow setting, suitable for VAV unit									
$\mathring{V}_{max}$	20…100% z $\mathring{V}_{nom}$									
$\mathring{V}_{min}$	0…100% z $\mathring{V}_{nom}$									
Standard control										
VAV mode for reference value input Y (connection 3)	- DC 2…10 V/ (4…20mA resistance 500Ω) - DC 0…10 V/ (0…20mA resistance 500Ω) - adjustable DC 0…10 V } (Input impedance min. 100 kΩ)									
Mode for actual value signal U_5 (connection 5)	- DC 2…10 V - DC 0…10 V - adjustable: vol. flow, blade position or diff. pressure } (max. 0,5 mA)									
CAV operating modes (constant volumetric flow)	CLOSED / $\mathring{V}_{min}$ / $\mathring{V}_{max}$ / OPEN* (* only with AC 24V supply)									
Connection	cable 6 x 0,75 mm^2 (for MP communication cable 4 x 0,75 mm^2)									
Protective category	III (Safety extra-low voltage)									
Ambient humidity	5 ... 95% r.h., non-condensing (in accordance with EN 60730-1)									
Non-operating temperature	-40°C…+80°C									
Weight	0,5 kg				0,7 kg				0,83 kg	

2.2. VRU regulator - regulation of air flow, pressure or pressure in the room

Universal VAV controller VRU and pressure sensor in one body (controlled by 0 / 2-10 V signal, MP-BUS, Modbus RTU, BACnet MS / TP) and actuator.

Depending on the type used, the controller works on the principle of dynamic or static measurement. It compares the measured differential pressure with the set value, in case of deviation it rotates the damper leaf until the set value is reached.

The regulators are divided according to the used pressure sensor:

- VRU-D3-BAC for control with 0/2…10V signal (optional MP-BUS, Modbus RTU, BACnet MS/TP), for measuring dynamic pressure in the range 0…500 Pa
- VRU-M1-BAC for control with 0/2…10V signal (optional MP-BUS, Modbus RTU, BACnet MS/TP), for measuring static pressure in the range 0…600 Pa
- VRU-M1R-BAC for control with 0/2…10V signal (optional MP-BUS, Modbus RTU, BAC net MS/TP), for measuring static pressure in the room in the range -75…+75 Pa

Further controllers are divided according to the type of actuator mechanism:

- LM24A-VST (5 N.m.), NM24A-VST (10 N.m.), SM24A-VST (20 N.m.) without return spring
- LF24-VST (4 N.m.), NF24A-VST (10 N.m.), SF24A-VST (20 N.m.) with return spring
- LMQ24A-VST (4 N.m.), NMQ24A-VST 8 N.m) fast drives
- NKQ24A-VST (10 N.m) quick-release drives with return spring

Fig. 13 Regulators VRU-D3-BAC, VRU-M1-BAC, VRU-M1R-BAC

No.	Designation	Function
1	⏚ -	AC/DC 24 V
2	~ +	
3	Y	VAV reference signal
5	U / MP	PP / MP communication
6	⏚	GND
7	D+	Control bus BACnet MS/TP / Modbus RTU
8	D-	

Tab. 2.2.1. Technical parameters of regulators VRU-D3-BAC, VRU-M1-BAC, VRU-M1R-BAC

Regulator	**VRU-D3-BAC**	**VRU-M1-BAC**	**VRU-M1R-BAC**
Power voltage	AC/DC 24 V, 50/60 Hz		
Functional range	AC 19.2...28.8 V / DC 21.6...28.8 V		
Dimensioning	2 VA (without actuator VST)		
Power input	1.5 W		
Control variable w1	DC 0/2...10 V @ input resistance 100 kΩ		
Working range	DC 2...10V		
Actual value signal U_5	0 (2)...10V		
Actuator connection	AC/DC 24V, PP-Link for VST- actuator		
Types of communication	PP Bus, MP Bus, ModBus RTU, BACnet		
Pressure sensor			
Measurement principle	Belimo D3 flow through sensor (dynamic measurement)	Belimo M1 membrane sensor	Belimo M1R membrane sensor
Mounting position	it is not position dependent, no reset is required		
Sensor range	0…500 Pa	0...600 Pa	-75...75 Pa
Maximum pressure	1500 Pa	1500 Pa	+-7kpa
Differential pressure	±1 Pa @ 0...20 Pa ±5% @ 20...500 Pa	–	–
Properties measured air	0...50°C / 5...95% r.H., non-condensing		
Pressure connection	hose ends for hose with inner 4… 6 mm		
Setting ranges			
Connection	screw terminals for 2 x 1,5 mm^2		
Protection class	III (safe low voltage)		
Degree of protection	IP 42		
Ambient temperature	0...+50°C		
Storage temperature	-20°C...+80°C		
Paramaterization	Belimo Assisant App (NFC) / PC-Tool / ZTH EU		
Weight	0,34 kg (without actuator VST)		

Fig. 14 LM24A-VST, LMQ24A-VST, NM24A-VST, NMQ24A-VST, SM24A-VST

Fig. 15 NKQ24A-VST

Fig. 16 NF24A-VST, SF24A-VST

Tab. 2.2.2. Technical parameters of actuators LM24A-VST, NM24A-VST, SM24A-VST, LMQ24A-VST, NMQ24A-VST, NF24A-VST, SF24A-VST, NKQ24A-VST

Actuator	**LM24A-VST**	**NM24A-VST**	**SM24A-VST**	**LMQ24A-VST**	**NMQ24A-VST**	**NF24A-VST**	**SF24A-VST**	**NKQ24A-VST**
Power voltage	AC/DC 24 V, 50/60 Hz (z VRU)							
Power input / Dimensioning	1W / 2VA	2W / 4VA	2W / 4VA	13W / 23VA	13W / 23VA	5W / 8VA	8,5W / 11VA	11W / 22VA
Torque at rated voltage	5Nm	10Nm	20Nm	4Nm	8Nm	10Nm	20Nm	6Nm
Sense of rotation	L / R (switch optional)					L / R		L / R (switch optional)
Adjustment time for >90 (resp. 95°)	120s	120s	120s	2,5s	4s	120s return spring <20s	120s return spring <20s	4s return spring <4s
Degree of protection	IP 54							
Protection class	III (safe low voltage)							
Ambient temperature	-30°C...+50°C							
Storage temperature	-40°C...+80°C							
Noise level	35 dB(A)	35 dB(A)	45 dB(A)	54 dB(A)	56 dB(A)	40 dB(A)	40 dB(A)	60 dB(A)
Weight	0,56 kg	0,78 kg	0,98 kg	0,56 kg	0,78 kg	2,3 kg	2,3 kg	1,4 kg

2.3. PROFI-LINE regulator GRUNER - Air flow regulator / pressure regulator

A pressure sensor, digital VAV controller and damper actuator all in one, providing a compact solution with a different communication possibilities.

The regulator is used for regulation of air flow or pressure regulation (CCPC), it works on the principle of dynamic or static measurement.
It compares the measured differential pressure with the set point, in case of deviation it rotates the damper blade until the set point is reached.

Regulators based on the principle of dynamic measurement are divided in accordance with the type of control:

- 327VM-024-05(-MB), 327VM-024-10(-MB) or 327VM-024-15(-MB) for control with signal 0(2)…10 V, or 0(4)…20 mA, (optional Modbus RTU), with range 0…500 Pa

Regulators based on the principle of static measurement are divided in accordance with the type of control and sensor range:

- 327VM-024-05-DS4(-MB), 327VM-024-10-DS4(-MB) or 327VM-024-15-DS4(-MB) for control with signal 0(2)…10 V or 0(4)…20 mA (optional Modbus RTU), with range 0…400 Pa
- 327VM-024-05-DS6(-MB), 327VM-024-10-DS6(-MB) or 327VM-024-15-DS6(-MB) for control with signal 0(2)…10 V or 0(4)…20 mA (optional Modbus RTU), with range 0…600 Pa
- 327VM-024-05-DS10(-MB), 327VM-024-10-DS10(-MB) or 327VM-024-15-DS10(-MB) for control with signal 0(2)…10 V or 0(4)…20 mA (optional Modbus RTU), with range 0…1500 Pa

Note: Regulators marked at the end -MB, e.g. 327VM-024-05-MB or 327VM-024-05-DS4-MB, have the same functions as regulators without this designation, in addition they have the possibility of Modbus RTU communication.

Fig. 17 Regulators 327VM-024-…

No.	Designation	Color of wire	Function
1	⊥ −	Black	AC/DC 24 V
2	~ +	Red	
3	Y	White	Control signal 0(2)…10 V
4	U	Orange	Signal output value

Fig. 18 Regulators 327VM-024-… -MB

No.	Designation	Color of wire	Function
1	⊥ −	Black	AC/DC 24 V
2	~ +	Red	
3	Y	White	Control signal 0(2)…10 V
4	U	Orange	Signal output value
A	CA -	Pink	Modbus RTU (Connection RS-485)
B	CB +	Gray	

Fig. 19 Regulator 327VM-024-…

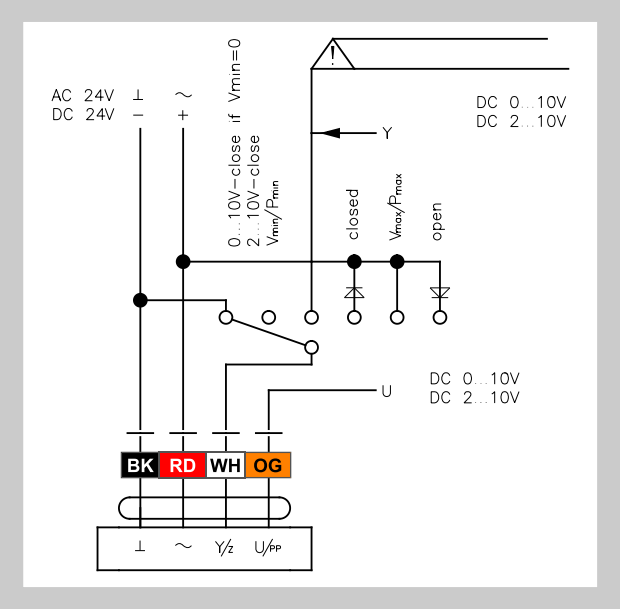

Fig. 20 Regulator 327VM-024-…-MB

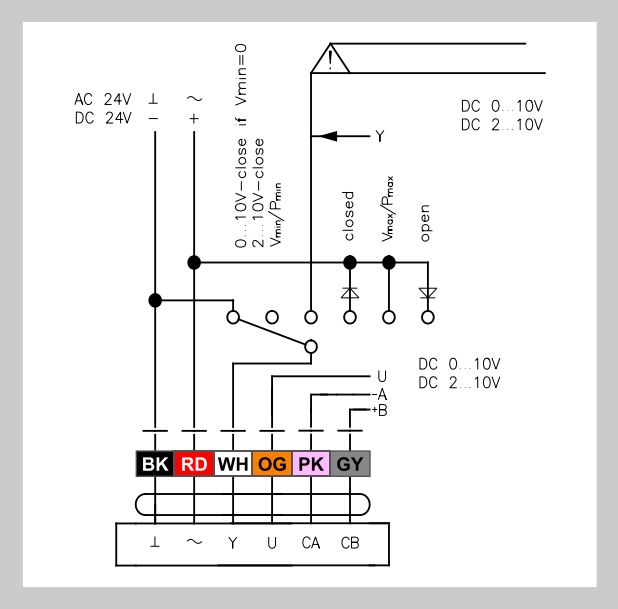

Tab. 2.3.1. Technical parameters of actuators 327VM-024-

Power voltage	AC/DC 24 V, 50/60 Hz
Nominal voltage	19...29 VAC/DC
Power input	< 3,0 W
Power input in a rest position	< 2,0 W
Torque	5|10|15 Nm
$\dot{V}_{nom}$	OEM specific nominal volumetric flow setting, suitable for VAV unit
$\dot{V}_{max}$	30…100% z $\dot{V}_{nom}$
$\dot{V}_{min}$	0…100% z $\dot{V}_{nom}$
Input signal Y	- DC 0(2)…10 V - DC 0(4)…20 mA
Output signal U	- DC 0(2)…10 V, max. 0,5 mA
Connection	cable 1m, 4 x 0,75 mm^2 (for regulators with Modbus RTU 6 x 0,75 mm^2)
Protective category	III (Safety extra-low voltage)
Ambient humidity	5...95% rH, non-condensing(in accordance with EN 60730-1)
Ambient temperature	0…+50 °C
Storage temperature	-20…+80 °C
Noise level	< 35 dB

Note: Tab. 2.3.1. apply to controllers operating on the principle of both dynamic and static measurement, as well as air flow control (Chapter 2.3.)

2.4. Regulator GRUNER universal - Air flow regulator

GUAC controller and pressure sensor in one housing, plus separate actuator.

The regulator is used to control the air flow, in accordance with the connected sensor works on the principle of dynamic or static measurement.
It compares the measured differential pressure with the set point, in case of deviation it rotates the damper blade until the set point is reached.

Regulators are divided according to the type of pressure sensor and type of communication:

- GUAC-DM3(-MB) for control with signal 0(2)…10 V or 0(4)…20 mA (optional Modbus RTU), for dynamic pressure measurement in the range 0…300 Pa
- GUAC-SM3(-MB) for control with signal 0(2)…10 V or 0(4)…20 mA (optional Modbus RTU), for static pressure measurement in the range 0…300 Pa

Furthermore, the regulators are divided in accordance with the used actuator:

- 227C-024-05-V/ST06, 227C-024-10-V/ST06 and 227C-024-15-V/ST06 without return spring
- 341C-024-05-V/ST06, 361C-024-10-V/ST06 and 361C-024-15-V/ST06 with return spring

Fig. 21 Regulatory GUAC-…

No.	Designation	Color of wire	Function
1	⊥ −	blue	AC/DC 24 V
2	~ +	brown	
3	Y	black	Control signal 0(2)…10 V
4	U	grey	Signal output value

Fig. 22 Regulators GUAC-…

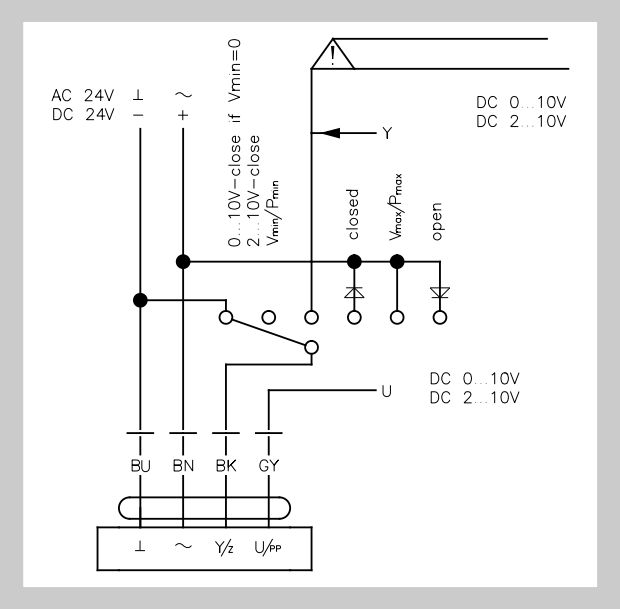

Fig. 23 Regulators GUAC-…-MB

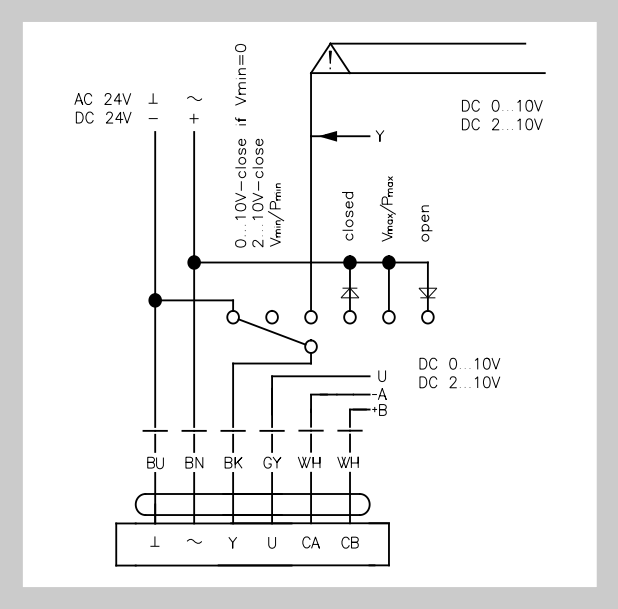

Tab. 2.4.1. Technical parameters of regulators GUAC-…

Regulator	GUAC-…
Power voltage	AC/DC 24 V, 50/60 Hz
Dimensioning	1,3 VA
Power input	0,6 W
$\mathring{V}_{nom}$	OEM specific nominal volumetric flow setting, suitable for VAV unit
$\mathring{V}_{max}$	0…100% z $\mathring{V}_{nom}$
$\mathring{V}_{min}$	0…100% z $\mathring{V}_{nom}$
Input signal Y	- DC 0(2)…10 V - DC 0(4)…20 mA
Output signal U	- DC 0(2)…10 V, max. 0,5 mA
Connection	cable 1m, Lumberg connector
Protective category	III (Safety extra-low voltage)
Ambient humidity	95% rH, non-condensing(in accordance with EN 60730-1)
Ambient temperature	0…+50 °C
Storage temperature	-20…+80 °C
Weight	0,38 kg

Fig. 24 Actuators 227C-024-…

Fig. 25 Actuators 341C-024-05-V/ST06 and 361C-024-…

Tab. 2.4.2. Technical parameters of actuators 227C-024-… , 341C-024-05-V/ST06 and 361C-024-…

Regulator	227C-024-05-V/ST06	227C-024-10-V/ST06	227C-024-15-V/ST06	341C-024-05-V/ST06	361C-024-10-V/ST06	361C-024-20-V/ST06
Power voltage	AC/DC 24 V, 50/60 Hz					
Dimensioning	3,5 VA			6,5 VA	8 VA	11,5 VA
Power input	2 W			5 W		8 W
Power input in a rest position	1 W			2 W		2 W
Torque	5 Nm	10 Nm	20 Nm	5 Nm	10 Nm	20 Nm
Connection	cable 1m, Lumberg connector					
Adjustment time for > 90°	< 100 s	< 150 s	< 150 s	< 100 s, return spring 20 s	< 150 s, return spring 20 s	< 150 s, return spring 20 s
Protective category	III (Safety extra-low voltage)					
Ambient humidity	95% rH, non-condensing (in accordance with EN 60730-1)					
Ambient temperature	-30…+50 °C					
Storage temperature	-30…+80 °C					
Noise level	< 35 dB					
Noise level of return spring	0			< 65 dB		
Weight	0,53 kg			1,4 kg	1,7 kg	

2.5. Regulator GRUNER universal - Pressure regulator

GUAC controller and pressure sensor in one housing, plus separate actuator.
The regulator is used for pressure regulation, in accordance with the connected sensor works on the principle of dynamic or static measurement.
It compares the measured differential pressure with the set point, in case of deviation it rotates the damper blade until the set point is reached.

Regulators are divided according to the type of pressure sensor and type of communication:

- GUAC-PM1(-MB) for control with signal 0(2)…10 V or 0(4)…20 mA (optional Modbus RTU), for static pressure measurement in the range 0…100 Pa
- GUAC-PM3(-MB) for control with signal 0(2)…10 V or 0(4)…20 mA (optional Modbus RTU), for static pressure measurement in the range 0…300 Pa
- GUAC-PM6(-MB) for control with signal 0(2)…10 V or 0(4)…20 mA (optional Modbus RTU), for static pressure measurement in the range 0…600 Pa
- GUAC-PM-DD3(-MB) for control with signal 0(2)…10 V or 0(4)…20 mA (optional Modbus RTU), for dynamic pressure measurement in the range 0…300 Pa

Furthermore, the regulators are divided in accordance with the used actuator:

- 227C-024-05-V/ST06, 227C-024-10-V/ST06 and 227C-024-15-V/ST06 without return spring
- 341C-024-05-V/ST06, 361C-024-10-V/ST06 and 361C-024-15-V/ST06 with return spring

Similar to Chapter 2.4., and Tab. 2.4.1. and 2.4.2. apply to all these embodiments

2.6. Compact regulator Siemens - Air flow regulator

A pressure sensor, digital VAV controller and damper actuator all in one, providing a compact solution with a different communication possibilities.

The regulator is used for regulation of air flow, it works on the principle of dynamic measurement. It compares the measured differential pressure with the set point, in case of deviation it rotates the damper blade until the set point is reached.

Regulators are divided in accordance with the type of control:

- GDB181.1E/3 and GLB181.1E/3 for control with signal 0(2)…10 V
- GDB181.1E/BA and GLB181.1E/BA using the protocol BACnet
- GDB181.1E/KN and GLB181.1E/KN using the protocol KNX
- GDB181.1E/MO and GLB181.1E/MO using the protocol Modbus RTU

Fig. 26 GDB181.1E/3 and GLB181.1E/3

No.	Designation	Color of wire	Function
1	G	red	AC 24 V
2	G0	black	
6	Y1	purple	Position signal of Actuator
7	Y2	orange	Position signal of Actuator
8	YC	grey	Control signal 0(2)…10 V
9	U	pink	Signal output value

Fig. 27 GDB181.1E/BA, GLB181.1E/BA, GDB181.1E/MO and GLB181.1E/MO

No.	Designation	Color of wire	Function
1	G	red	AC 24 V
2	G0	black	

No.	Designation	Color of wire	Function
6	REF	purple	Reference
8	+	grey	Modbus RTU / BACnet
9	-	pink	Modbus RTU / BACnet

Fig. 28 GDB181.1E/KN and GLB181.1E/KN

No.	Designation	Color of wire	Function
1	G	red	AC 24 V
2	G0	black	

No.	Designation	Color of wire	Function
1	CE+	red	KNX
2	CE-	black	KNX

Tab. 2.6.1. Technical parameters of actuators **GDB181.1E/… and GLB181.1E/…**

VAV-Regulator	GDB181.1E/…				GLB181.1E/…			
Communication	**3** (without)	**MO**	**KN**	**BA**	**3 (bez)**	**MO**	**KN**	**BA**
Power voltage	AC 24 V, 50/60 Hz							
Functional range	+- 20%							
Dimensioning	3 VA							
Power input	2,5 W							
Torque	5 Nm				10 Nm			
Adjustment ranges								
$\mathring{V}_{nom}$	OEM specific nominal volumetric flow setting, suitable for VAV unit							
$\mathring{V}_{max}$	20…120% z $\mathring{V}_{nom}$							
$\mathring{V}_{min}$	-20…100% z $\mathring{V}_{nom}$							
Connection	cable 6 x 0,75 mm^2							
Protective category	III (Safety extra-low voltage)							
Ambient humidity	95% rH, non-condensing(in accordance with EN 60730-1)							
Storage temperature	-25…+70 °C							
Weight	0,6 kg							

3. Dimensions, weights

3.1. Dimensions, weights

Tab. 3.1.1. **Main dimensions and weights**

Size	D [mm]	L [mm]	L_1 [mm]	Weight SPIRO [kg]		Weight with flange [kg]	
				without insulation	with insulation	without insulation	with insulation
80	80	450	344	1,6	2,8	1,9	3,1
100	100	450	344	1,7	3,1	2,0	3,4
125	125	450	344	2,0	3,6	2,4	3,9
140	140	450	344	2,2	3,9	2,6	4,3
160	160	450	344	2,5	4,3	3,2	5,0
180	180	450	344	2,8	4,8	3,3	5,3
200	200	450	344	3,0	5,1	3,6	5,7
225	225	450	344	3,5	5,8	4,1	6,4
250	250	450	344	4,4	6,9	5,1	7,6
280	280	450	344	5,0	7,7	5,8	8,5
315	315	450	344	5,6	8,5	6,5	9,4
355	355	450	344	6,6	9,8	7,6	10,8
400	400	450	344	7,5	11,1	9,7	13,3
500	500	600	494	12,2	18,0	15,1	21,0
630*	630	600	494	19,6	26,7	23,5	30,7

In the case of the "Belimo universal" controller design, the controller with sensor + actuator (acc. to design Tab. 14.1.1) is required to weight in Tab. 3.1.1 add weight of the VRU-xx-BAC controller (0.3 kg).

*** For size 630 is controlling via MF not available.**

Tab. 3.1.2. Other dimensions and assignment of actuators

Size [mm]	N [mm]	N_1 [mm]	W [mm]	M [mm]	VAV controler BELIMO / GRUNER / SIEMENS
80	179/165	22/23	66/65	71/76	LMV-D3-xxx (LM24A-VST) / 327VM-024-05 / GDB181.1x
100	179/165	22/23	66/65	71/76	LMV-D3-xxx (LM24A-VST) / 327VM-024-05 / GDB181.1x
125	179/165	22/23	66/65	71/76	LMV-D3-xxx (LM24A-VST) / 327VM-024-05 / GDB181.1x
140	179/165	22/23	66/65	71/76	LMV-D3-xxx (LM24A-VST) / 327VM-024-05 / GDB181.1x
160	179/165	22/23	66/65	71/76	LMV-D3-xxx (LM24A-VST) / 327VM-024-05 / GDB181.1x
180	179/165	22/23	66/65	71/76	LMV-D3-xxx (LM24A-VST) / 327VM-024-05 / GDB181.1x
200	179/165	22/23	66/65	71/76	LMV-D3-xxx (LM24A-VST) / 327VM-024-05 / GDB181.1x
225	179/165	22/23	66/65	71/76	LMV-D3-xxx (LM24A-VST) / 327VM-024-05 / GDB181.1x
250	179/165	22/23	66/65	71/76	LMV-D3-xxx (LM24A-VST) / 327VM-024-05 / GDB181.1x
280	179/165	22/23	66/65	71/76	LMV-D3-xxx (LM24A-VST) / 327VM-024-05 / GDB181.1x
315	179/165	22/23	66/65	71/76	LMV-D3-xxx (LM24A-VST) / 327VM-024-05 / GDB181.1x
355	187/165	25/23	80/65	72/76	NMV-D3-xxx (NM24A-V) / 327VM-024-10 / GLB181.1x
400	187/165	25/23	80/65	72/76	NMV-D3-xxx (NM24A-V) / 327VM-024-10 / GLB181.1x
500	187/165	25/23	80/65	72/76	NMV-D3-xxx (NM24A-V) / 327VM-024-10 / GLB181.1x
630	202/165	30/23	88/65	74/76	SMV-D3-xxx (SM24A-V) / 327VM-024-15 / –

For design with quick drive, emergency function or quick drive with emergency function, the size of the actuator must be discussed with the manufacturer.

Fig. 29 RPM-V - with rubber sealing

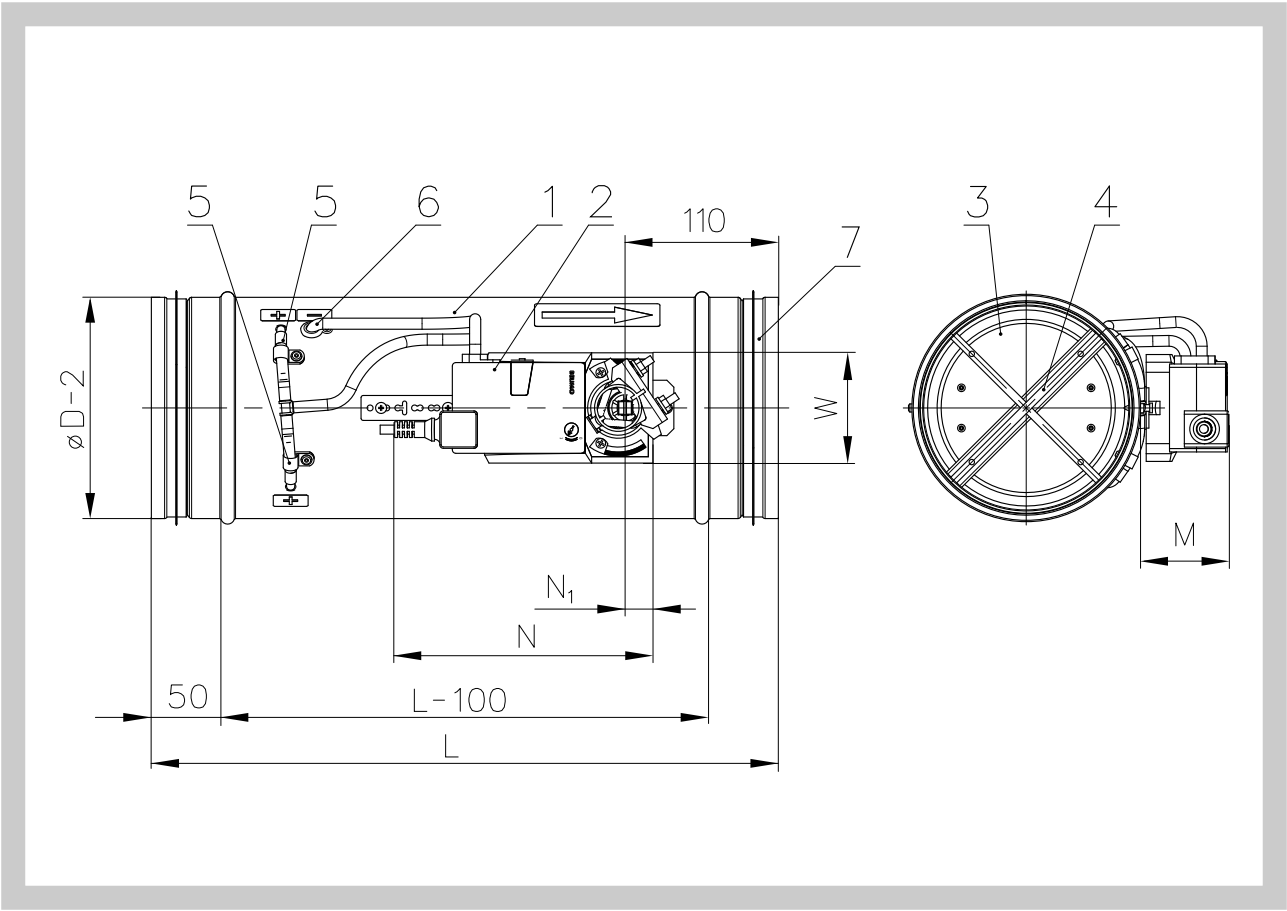

Fig. 30 RPM-V - with flanges

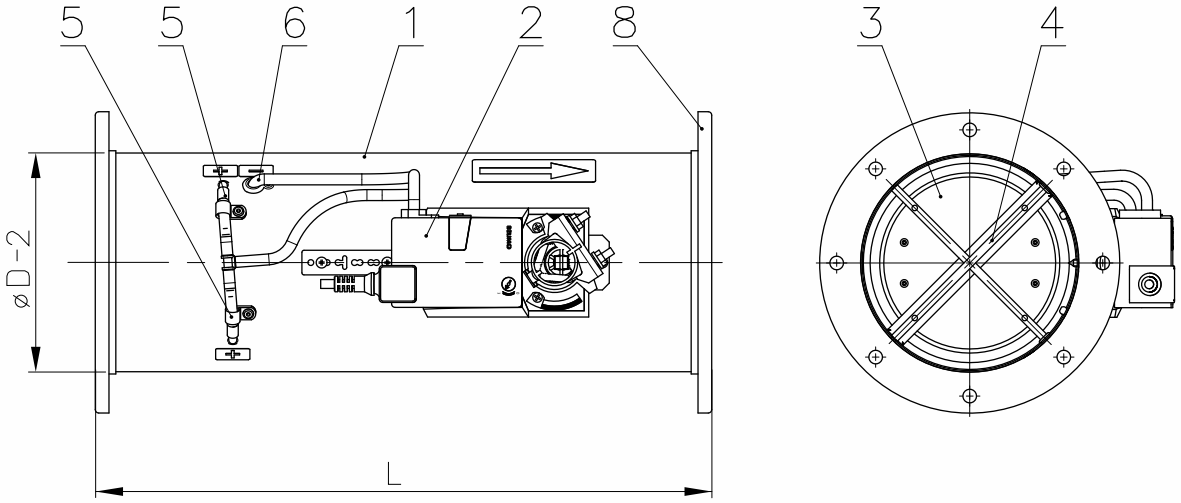

Flanges dimensions acc. EN 12 0505.

Fig. 31 RPM-V - with insulation

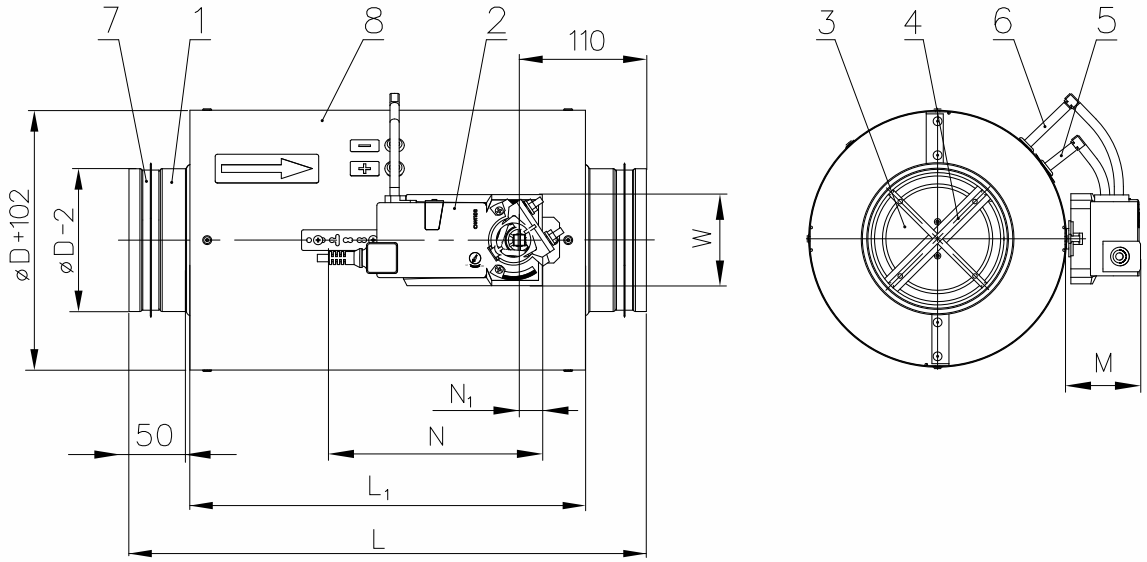

Position:

1	Controller body	4	Pressure sensors	7	Rubber sealing
2	Compact controller	5	Pressure sampling - p_1	8	Flange
3	Controller blade	6	Pressure sampling - p_2	9	Insulation cover

4. Placement and Assembly

4.1. The controllers are meant for installation in duct. The operational position is optional. The direction of flow must be observed.

Fig. 32 Recommended distance from double branch joint

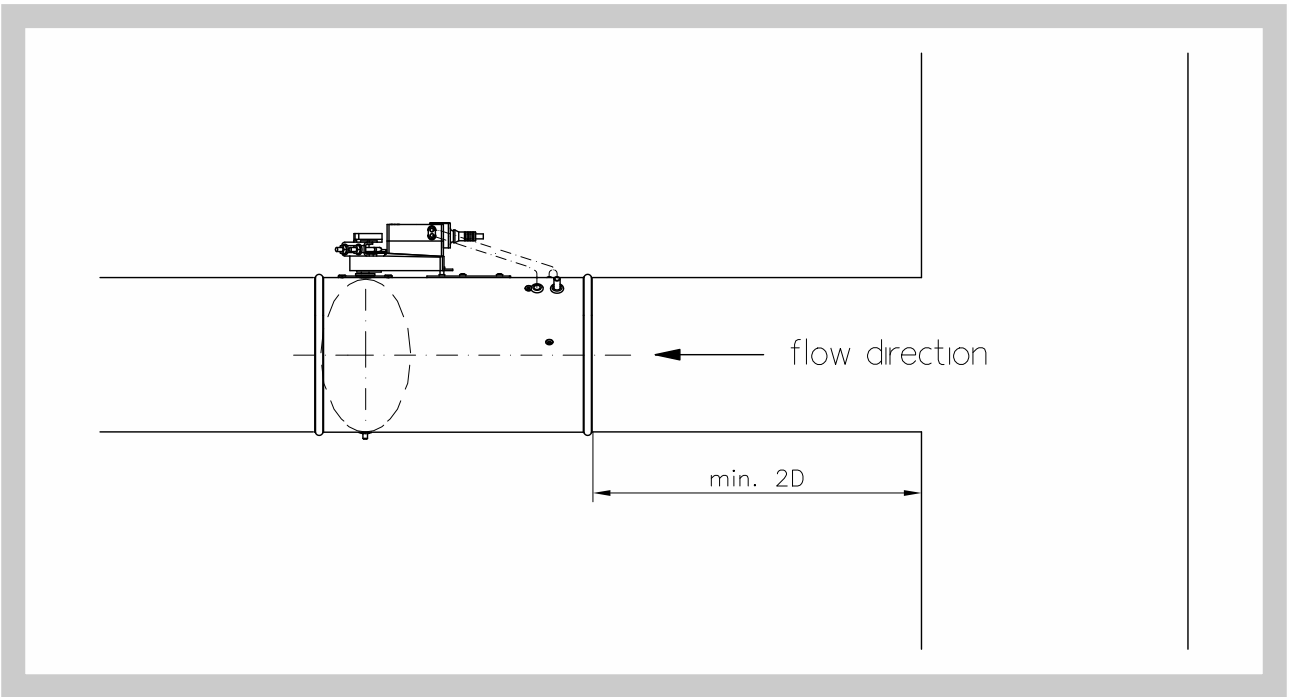

Fig. 33 Recommended distance from bend

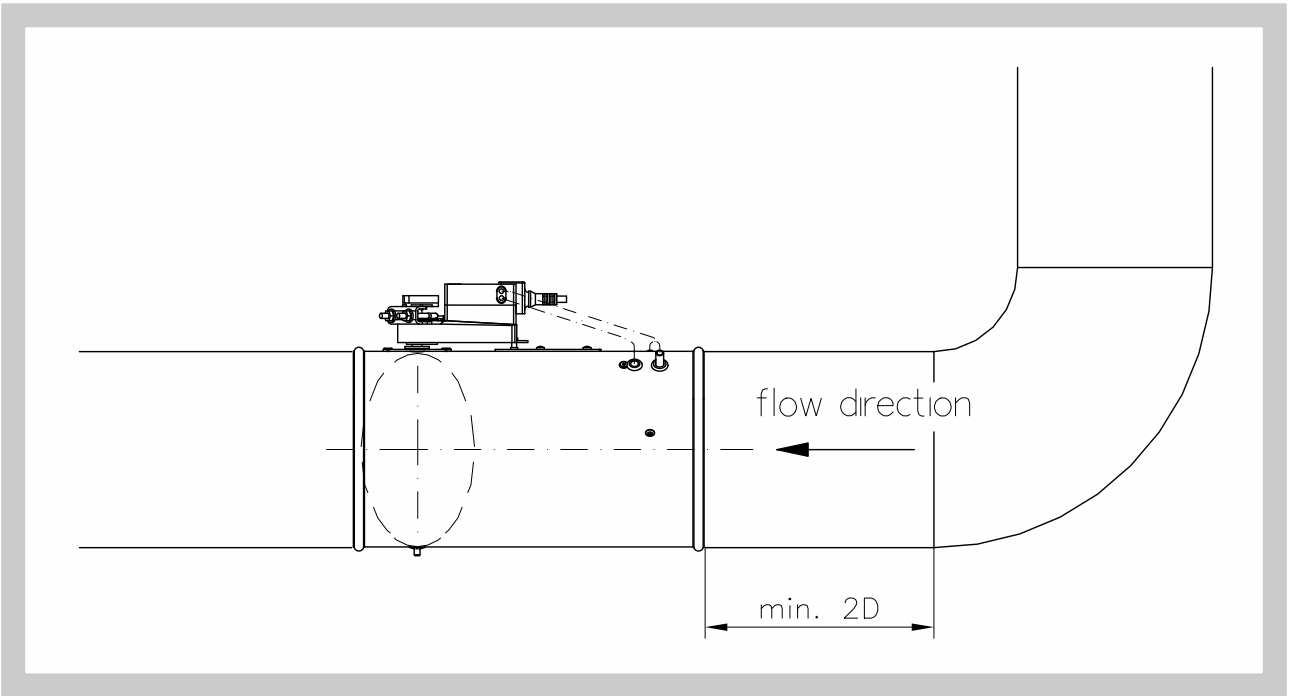

III. TECHNICAL DATA

5. Basic parameters

5.1. Air volume

Tab. 5.1.1. Air volume

Size [mm]	Air volume [m³/h]					
	Standard values*			Maximum values		
	Minimal (w ≈ 1m/s)	Maximal (w ≈ 7m/s)	$\mathring{V}_{nom}$	Minimal (w ≈ 1m/s)	Maximal (w ≈ 12m/s)	$\mathring{V}_{nom}$
80	18	125	125	18	220	220
100	30	200	200	30	350	350
125	45	310	310	45	550	550
140	55	400	400	55	700	700
160	70	500	500	70	900	900
180	90	650	650	90	1200	1200
200	115	800	800	115	1400	1400
225	145	1000	1000	145	1800	1800
250	180	1250	1250	180	2200	2200
280	220	1550	1550	220	2800	2800
315	280	2000	2000	280	3500	3500
355	355	2500	2500	355	4500	4500
400	455	3200	3200	455	5800	5800
500	710	5000	5000	710	8500	8500
630	1120	7900	7900	1120	13500	13500

*** Default controller settings - Belimo / Gruner / Siemens**

6. Determination of actual air volume

6.1. Air volume value is determined by means of the computation from the measured value U_5.

Sample for the operating mode 2...10 V

$$\dot{V} = \frac{U_5 - 2{,}0}{8} \cdot \dot{V}_{nom}$$

Sample for the operating mode 0...10 V

$$\dot{V} = \frac{U_5 \cdot \dot{V}_{nom}}{10}$$

Fig. 34 Determination of the actual value of U_5 by means of a voltage meter

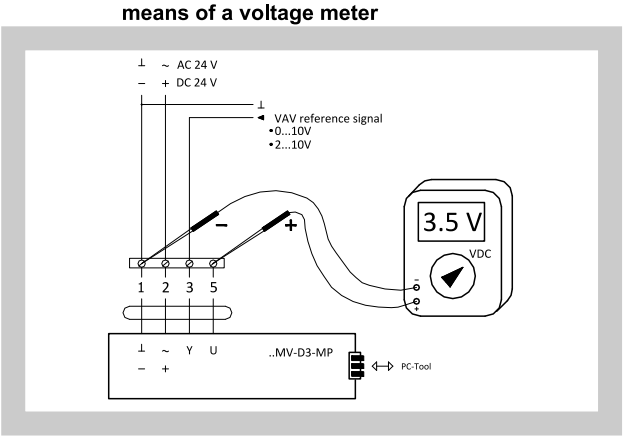

Example: Operating mode 2…10 V

Searched for: actual air volume
Voltage measured on U_5: 3,5 V
$\dot{V}_{nom}$ = 2800 m³.h⁻¹

$$\dot{V} = \frac{3{,}5 - 2{,}0}{8} \cdot 2800 = 525$$

Actual air volume is 525 m³.h⁻¹.

Example: Operating mode 0…10 V

Searched for: actual air volume
Voltage measured on U_5 : 3,5 V
$\dot{V}_{nom}$ = 2200 m³.h⁻¹

$$\dot{V} = \frac{3{,}5 \cdot 2200}{10} = 770$$

Actual air volume is 770 m³.h⁻¹

7. Pressure loss

7.1. Pressure losses

Diagram 7.1.1. Pressure losses (the values are valid when the damper of the controller is completely open)

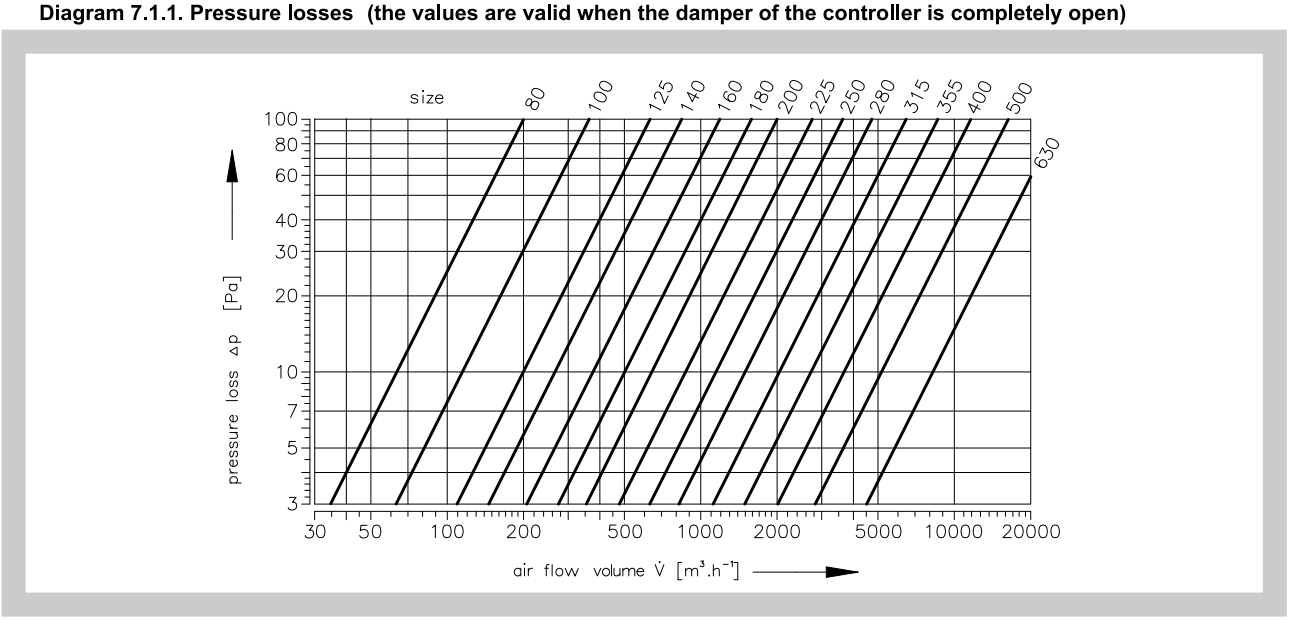

8. Noise data

8.1. Air-regenerated Noise

The noise arising due to the flow of air volume controller is listed in the following tables Tab. 8.1.1. - Tab. 8.1.4.

$\dot{V}$	[m³.h⁻¹]	- air flow volume	L_{WA}	[dB(A)]	- total level of acoustic power corrected by filter A
Δp_{st}	[Pa]	- pressure differential			
L_W	[dB/Okt.]	- level of acoustic power in the octave band	f_m	[Hz]	- mean frequencies in the octave bands

Tab. 8.1.1. Sound power level inside the pipeline at pressure difference 50 Pa

Size [mm]	$\dot{V}$ [m³.h⁻¹]	Δp_{st} = 50 Pa								
		L_W [dB/Okt]								L_{WA} [dB(A)]
		f_m [Hz]								
		63	125	250	500	1000	2000	4000	8000	
80	18	40	31	31	25	28	24	18	7	32
	88	54	44	38	38	41	37	29	18	44
	154	59	49	43	43	46	43	35	23	49
	220	63	53	47	47	50	46	38	27	53
100	30	42	33	27	27	31	26	20	9	34
	140	58	49	45	45	43	39	39	22	48
	245	65	58	54	54	49	50	41	29	56
	350	69	63	59	59	51	53	42	31	60
125	45	44	34	28	28	31	28	20	10	34
	220	59	50	46	43	44	41	34	24	48
	385	64	56	52	48	47	43	40	28	52
	550	71	63	59	54	51	43	44	34	57
140	55	45	36	30	30	33	29	21	11	36
	280	61	52	49	45	43	40	36	25	49
	490	64	57	53	49	48	44	40	28	53
	700	72	64	60	55	52	48	45	35	58
160	70	48	39	32	32	36	32	23	14	39
	360	60	51	47	44	46	41	34	24	49
	630	66	58	54	50	49	45	41	30	54
	900	72	65	60	57	54	49	46	35	59
180	90	48	38	33	33	36	32	24	13	39
	480	60	51	47	45	45	42	35	24	49
	840	66	58	55	51	50	46	42	30	55
	1200	74	66	62	57	54	50	47	37	60
200	115	47	36	31	31	35	33	24	13	39
	560	60	51	47	45	46	42	35	24	49
	980	68	60	56	52	51	47	43	31	56
	1400	75	67	63	58	55	51	38	38	61
225	145	49	39	33	33	36	32	25	13	39
	720	60	51	47	45	46	42	35	24	49
	1260	68	60	56	52	51	47	43	32	56
	1800	75	67	63	59	56	52	49	38	61
250	180	48	36	32	32	34	31	23	12	38
	880	61	53	49	46	47	43	36	26	51
	1540	68	61	57	53	52	48	44	32	57
	2200	74	66	63	58	55	51	48	37	61
280	220	50	40	34	34	36	33	27	15	40
	1120	64	56	52	49	50	46	39	28	54
	1960	69	62	58	54	53	49	45	33	58
	2800	77	69	65	60	57	50	50	39	63
315	280	49	55	34	34	37	33	25	15	42
	1400	63	55	51	48	49	45	38	27	53
	2450	70	62	58	54	53	49	45	34	58
	3500	78	70	66	61	58	54	51	40	64
355	355	51	41	36	36	39	37	28	17	43
	1800	63	54	50	47	48	44	38	27	52
	3150	70	62	58	54	53	49	45	34	58
	4500	77	69	65	60	57	53	50	40	63
400	455	53	44	38	38	41	37	29	18	44
	2320	63	54	50	47	48	44	38	27	52
	4060	70	62	58	54	53	49	45	34	58
	5800	76	68	64	59	57	53	50	39	63
500	710	49	40	34	34	37	33	25	15	40
	4200	64	55	51	48	49	45	39	28	53
	6300	71	63	59	55	54	50	46	35	59
	8500	77	69	65	60	58	54	51	40	63
630	1120	52	44	38	38	41	37	30	20	44
	6700	66	57	53	50	51	47	40	30	55
	10000	73	65	61	57	56	52	48	37	61
	13500	78	70	66	62	60	56	53	42	65

Tab. 8.1.2. Sound power level inside the pipeline at pressure difference 100 Pa

Size [mm]	$\dot{V}$ [m³.h⁻¹]	Δp_{st} = 100 Pa								
		L_W [dB/Okt]								L_{WA} [dB(A)]
		f_m [Hz]								
		63	125	250	500	1000	2000	4000	8000	
80	18	46	36	30	30	34	29	21	9	37
	88	59	49	43	43	46	42	34	22	49
	154	64	54	48	48	51	47	39	27	54
	220	68	58	52	52	55	51	43	31	58
100	30	48	38	32	32	35	31	23	12	38
	140	63	54	50	50	48	44	37	26	52
	245	70	62	59	59	53	49	45	33	60
	350	73	66	64	64	55	51	47	35	64
125	45	49	39	33	33	37	32	24	13	40
	220	65	56	52	50	49	45	39	28	53
	385	69	61	57	53	52	48	44	32	57
	550	76	68	64	59	56	52	49	38	62
140	55	51	41	35	35	38	34	26	14	41
	280	65	56	52	49	50	46	39	28	54
	490	70	62	58	54	53	49	45	33	58
	700	77	69	65	60	57	53	50	39	63
160	70	54	44	38	38	41	37	30	17	44
	360	65	56	52	49	50	46	39	28	54
	630	71	63	59	55	54	50	46	34	59
	900	78	70	66	61	58	54	51	40	64
180	90	54	44	38	38	41	37	29	17	44
	480	66	57	53	50	51	47	40	29	55
	840	72	64	60	56	55	51	47	35	60
	1200	79	71	67	62	59	55	52	41	65
200	115	54	44	38	38	42	37	29	18	45
	560	66	57	53	50	51	47	40	29	55
	980	73	65	61	57	56	52	48	36	61
	1400	80	72	68	63	60	56	53	42	66
225	145	55	45	39	39	43	38	29	18	46
	720	66	57	53	50	51	47	40	29	55
	1260	73	65	61	57	56	52	48	36	61
	1800	80	72	68	63	60	56	53	42	66
250	180	52	43	37	37	41	36	28	16	44
	880	67	58	54	51	52	48	41	30	56
	1540	73	65	61	57	56	52	48	36	61
	2200	79	71	67	62	59	55	52	41	65
280	220	55	45	39	39	43	39	31	19	46
	1120	70	61	57	54	55	51	44	33	59
	1960	74	66	62	58	57	53	49	37	62
	2800	81	73	69	64	61	57	54	43	67
315	280	56	46	41	41	44	41	32	20	47
	1400	69	60	56	53	54	50	43	32	58
	2450	75	67	63	59	58	54	50	38	63
	3500	82	74	70	65	62	58	55	44	68
355	355	58	48	42	42	46	41	33	31	49
	1800	69	60	56	53	54	50	43	32	58
	3150	75	67	63	59	58	55	51	39	63
	4500	82	74	70	65	62	58	55	44	68
400	455	58	49	42	42	46	42	34	22	49
	2320	69	60	56	53	54	50	43	32	58
	4060	76	68	64	60	59	55	51	39	64
	5800	82	74	70	65	62	58	55	44	68
500	710	56	46	40	40	43	39	31	21	46
	4200	69	60	56	53	54	51	44	33	58
	6300	77	69	65	61	60	56	52	40	65
	8500	82	74	70	65	62	59	56	45	68
630	1120	60	49	44	44	45	43	35	23	49
	6700	72	63	59	56	57	53	46	35	61
	10000	79	71	67	63	62	58	54	42	67
	13500	85	77	73	68	65	61	58	47	71

Tab. 8.1.3. Sound power level inside the pipeline at pressure difference 250 Pa

Size [mm]	$\dot{V}$ [m³.h⁻¹]	Δp_{st} = 250 Pa								
		L_W [dB/Okt]								L_{WA} [dB(A)]
		f_m [Hz]								
		63	125	250	500	1000	2000	4000	8000	
80	18	54	44	38	38	41	37	29	17	44
	88	67	57	51	51	54	50	42	30	57
	154	72	62	56	56	59	55	47	35	62
	220	76	66	60	60	63	59	51	39	66
100	30	56	46	41	41	43	40	32	20	47
	140	70	61	57	57	55	52	44	33	60
	245	77	69	65	66	61	55	52	40	67
	350	83	75	71	72	63	59	56	45	72
125	45	58	48	42	42	45	41	33	21	48
	220	70	61	58	55	56	51	45	34	60
	385	77	69	65	61	60	55	51	39	65
	550	83	75	71	65	62	58	55	44	69
140	55	60	50	44	44	48	44	35	23	51
	280	72	63	59	56	57	53	46	35	61
	490	77	69	65	61	60	56	52	40	65
	700	83	75	71	66	63	59	56	45	69
160	70	61	51	45	45	49	44	36	24	52
	360	73	64	60	57	58	54	47	36	62
	630	78	70	66	62	61	57	53	41	66
	900	84	76	72	67	64	60	57	46	70
180	90	63	53	47	47	50	45	37	25	53
	480	73	65	62	59	58	55	47	36	63
	840	78	71	67	63	62	57	53	41	67
	1200	84	77	74	69	65	61	57	46	72
200	115	63	53	47	47	51	46	38	26	54
	560	74	65	61	58	59	55	48	37	63
	980	79	72	68	64	63	58	54	42	68
	1400	85	77	73	69	65	61	58	47	72
225	145	64	54	48	48	51	49	40	28	55
	720	74	65	61	58	59	55	48	37	63
	1260	80	72	68	64	63	59	55	43	68
	1800	86	78	74	69	66	62	59	48	72
250	180	64	55	48	48	50	47	40	27	54
	880	74	65	61	58	59	55	48	37	63
	1540	80	72	68	64	63	59	55	43	68
	2200	86	78	74	69	66	62	59	48	72
280	220	65	55	49	49	53	48	41	29	56
	1120	76	67	63	60	61	56	49	38	65
	1960	81	73	69	65	64	60	56	44	69
	2800	87	79	75	70	67	63	60	49	73
315	280	66	57	50	50	53	51	43	30	57
	1400	76	67	63	60	61	57	50	39	65
	2450	82	74	70	66	65	61	57	45	70
	3500	88	80	76	71	68	64	61	50	74
355	355	67	57	51	51	54	52	43	31	58
	1800	77	68	64	61	62	58	51	40	66
	3150	82	75	71	67	67	62	57	45	71
	4500	88	80	76	71	68	64	61	50	74
400	455	70	60	54	54	58	53	45	33	61
	2320	77	69	65	62	63	59	51	40	67
	4060	82	75	71	67	66	62	57	45	71
	5800	88	80	76	71	68	64	61	50	74
500	710	66	56	50	50	53	49	42	30	56
	4200	79	70	66	63	64	60	53	42	68
	6300	84	76	73	69	68	63	59	47	73
	8500	90	82	78	73	70	66	63	52	76
630	1120	68	58	50	50	52	50	43	31	56
	6700	81	72	68	65	66	62	55	44	70
	10000	86	79	75	71	70	65	61	49	75
	13500	92	84	80	75	72	68	65	54	78

Tab. 8.1.4. Sound power level inside the pipeline at pressure difference 500 Pa

Size [mm]	$\dot{V}$ [m³.h⁻¹]	Δp_{st} = 500 Pa								
		L_W [dB/Okt]								L_{WA} [dB(A)]
		f_m [Hz]								
		63	125	250	500	1000	2000	4000	8000	
80	18	61	51	45	45	48	46	37	25	52
	88	74	64	58	58	61	58	50	38	64
	154	79	70	63	63	66	62	54	42	69
	220	83	73	67	68	70	67	59	47	73
100	30	64	54	48	48	51	47	39	27	54
	140	77	68	64	64	62	58	51	40	66
	245	84	76	72	72	67	63	59	47	73
	350	90	82	78	78	70	66	63	52	78
125	45	66	54	50	50	54	50	41	29	57
	220	78	69	65	61	63	58	51	40	66
	385	83	75	71	67	66	63	59	47	71
	550	89	81	77	72	69	66	63	52	75
140	55	67	57	51	51	54	50	42	30	57
	280	79	70	66	63	64	60	53	42	68
	490	81	76	72	68	67	63	59	47	72
	700	89	81	77	72	69	65	62	51	75
160	70	69	59	53	53	56	52	44	32	59
	360	81	72	68	65	66	62	55	44	70
	630	86	78	74	70	69	65	61	49	74
	900	91	83	79	74	71	67	64	53	77
180	90	70	60	54	54	58	53	45	33	61
	480	81	72	68	65	66	62	55	44	70
	840	86	78	74	70	69	65	61	49	74
	1200	92	84	80	75	72	68	65	54	78
200	115	71	61	55	55	59	54	46	34	62
	560	81	72	68	65	66	62	55	44	70
	980	86	78	74	70	69	65	61	49	74
	1400	92	84	80	75	72	68	65	54	78
225	145	72	62	56	56	60	55	47	35	63
	720	81	72	68	65	66	62	55	44	70
	1260	86	78	74	70	69	65	61	49	74
	1800	91	83	79	74	71	67	64	53	77
250	180	72	62	56	56	59	55	47	35	62
	880	80	71	67	64	65	61	54	43	69
	1540	85	77	73	69	68	64	60	48	73
	2200	91	83	79	74	71	67	64	53	77
280	220	73	64	58	58	60	57	49	37	64
	1120	82	73	68	67	66	63	56	45	71
	1960	86	78	74	70	69	65	61	49	74
	2800	92	84	80	75	72	68	65	54	78
315	280	75	65	59	59	63	58	50	38	66
	1400	83	74	70	67	68	65	58	47	72
	2450	87	80	76	72	71	66	63	50	76
	3500	93	85	81	76	73	69	66	55	79
355	355	77	67	61	61	65	60	52	50	68
	1800	85	76	72	69	70	66	59	48	74
	3150	90	82	78	74	73	69	65	53	78
	4500	94	86	82	77	74	70	67	56	80
400	455	79	69	63	63	66	61	53	41	69
	2320	86	77	73	70	71	67	60	49	75
	4060	90	82	78	74	73	69	65	53	78
	5800	94	86	82	77	74	70	67	56	80
500	710	78	67	60	60	63	60	53	41	66
	4200	88	79	75	72	73	69	62	51	77
	6300	92	84	80	76	75	71	67	55	80
	8500	96	88	84	79	76	72	69	58	82
630	1120	80	70	65	65	68	63	55	43	71
	6700	90	81	77	74	75	71	64	53	79
	10000	94	86	82	78	77	73	69	57	82
	13500	98	90	86	81	78	74	71	60	84

Diagram No. 1 **Sound power level L_{WA} [dB(A)] inside the pipeline DN80**

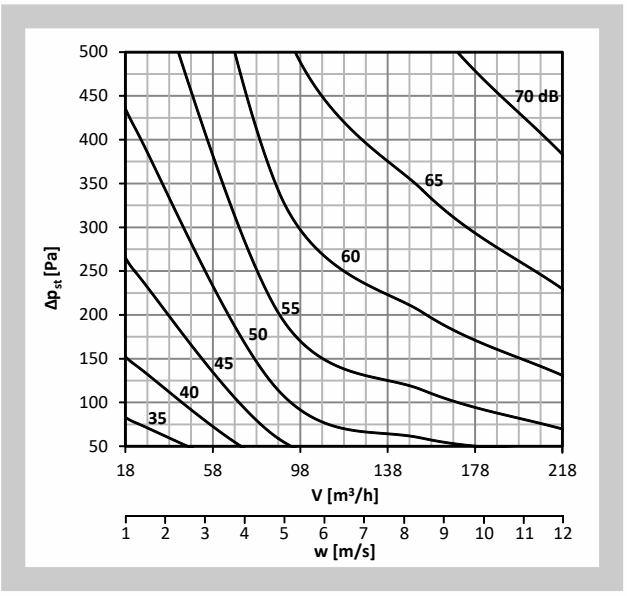

Diagram No. 2 **Sound power level L_{WA} [dB(A)] inside the pipeline DN100**

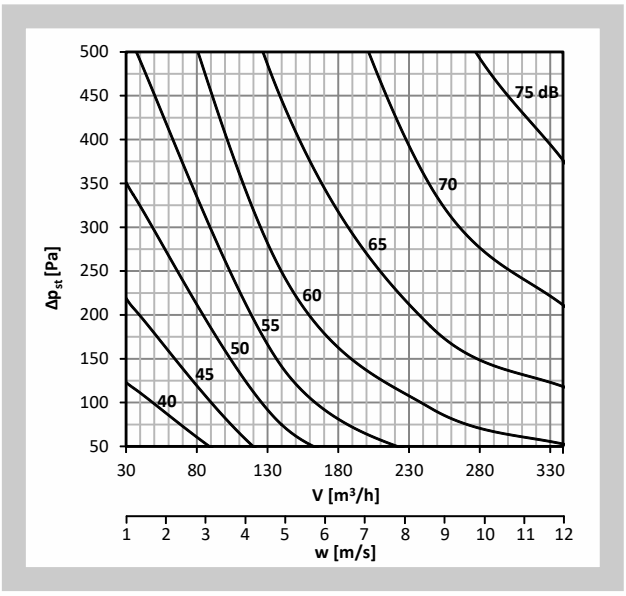

Diagram No. 3 **Sound power level L_{WA} [dB(A)] inside the pipeline DN125**

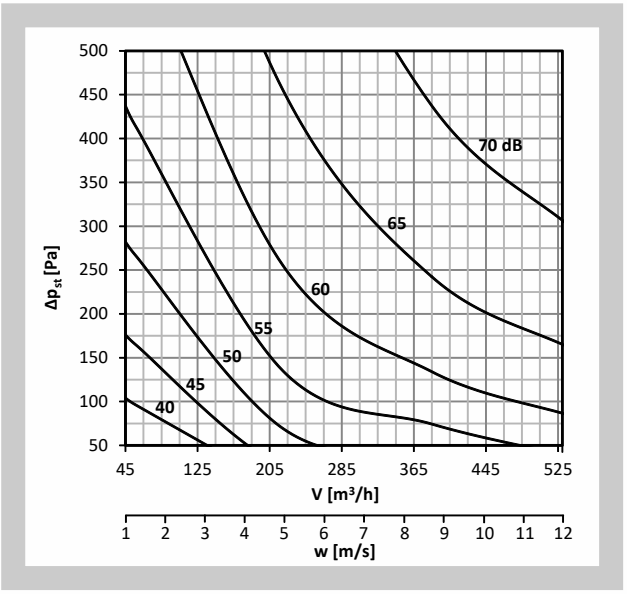

Diagram No. 4 **Sound power level L_{WA} [dB(A)] inside the pipeline DN140**

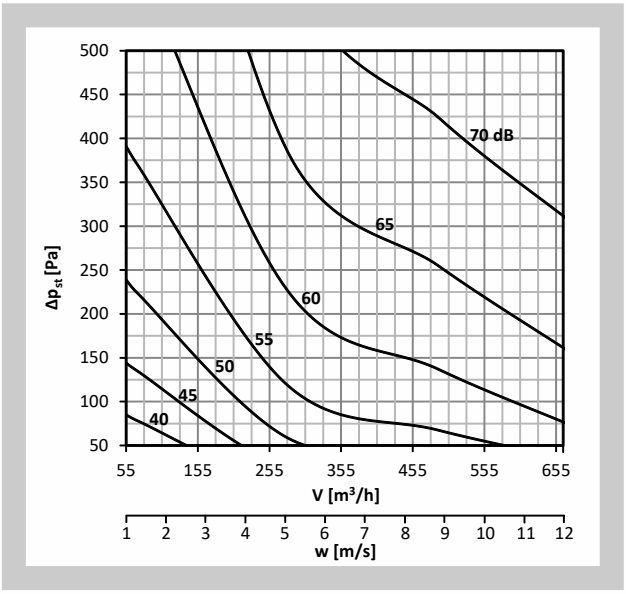

Diagram No. 5 **Sound power level L_{WA} [dB(A)] inside the pipeline DN160**

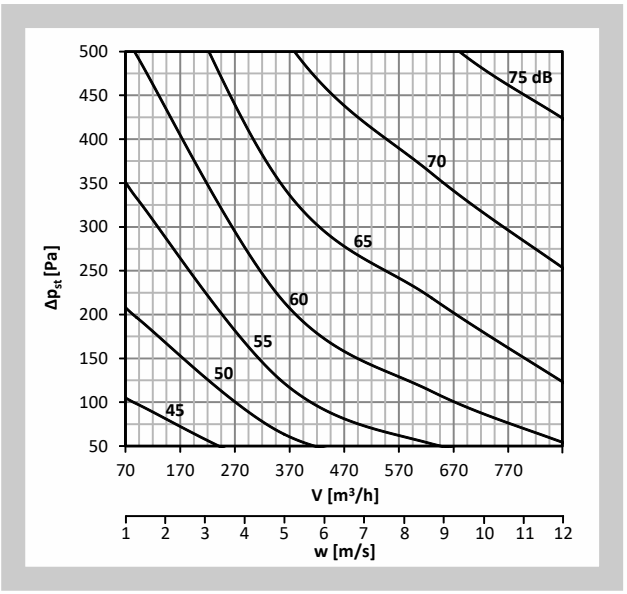

Diagram No. 6 **Sound power level L_{WA} [dB(A)] inside the pipeline DN180**

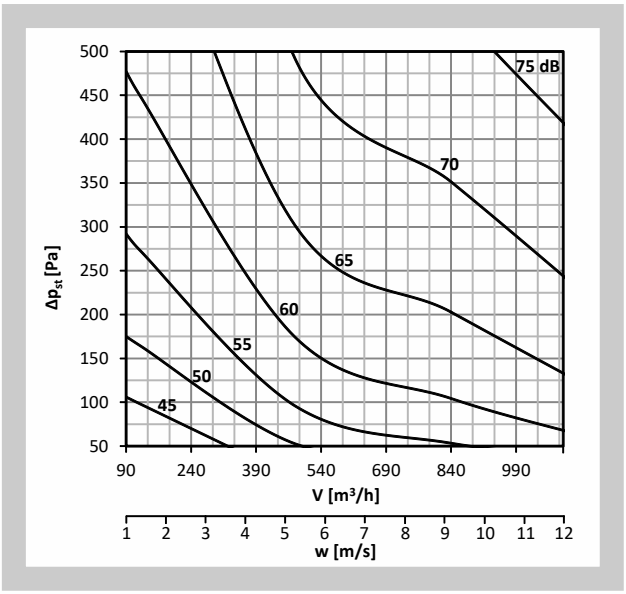

Diagram No. 7 Sound power level L_{WA} [dB(A)] inside the pipeline DN200

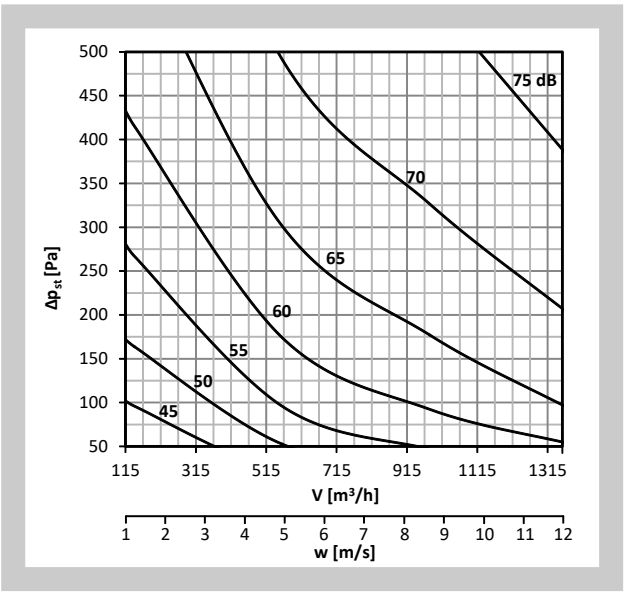

Diagram No. 8 Sound power level L_{WA} [dB(A)] inside the pipeline DN225

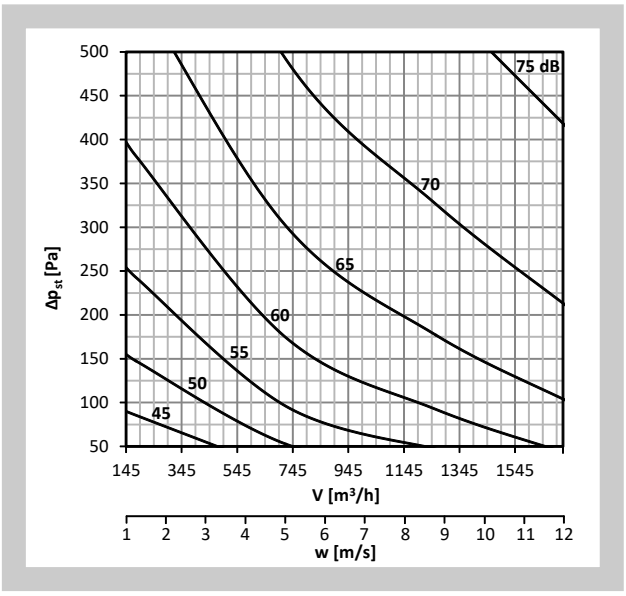

Diagram No. 9 Sound power level L_{WA} [dB(A)] inside the pipeline DN250

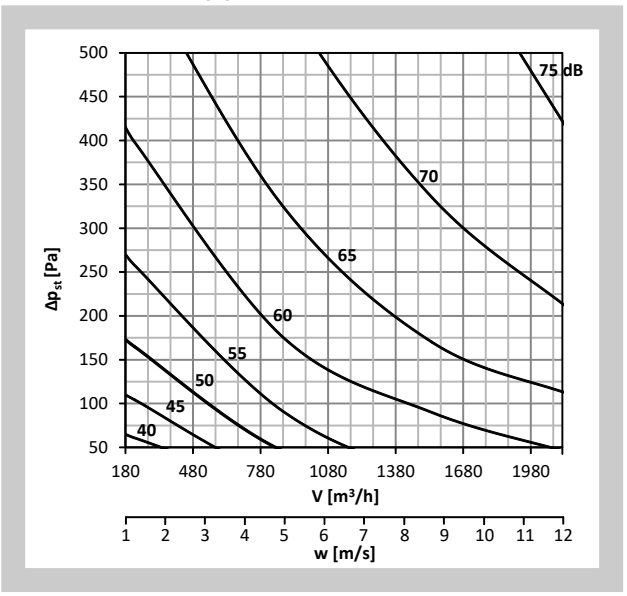

Diagram No. 10 Sound power level L_{WA} [dB(A)] inside the pipeline DN280

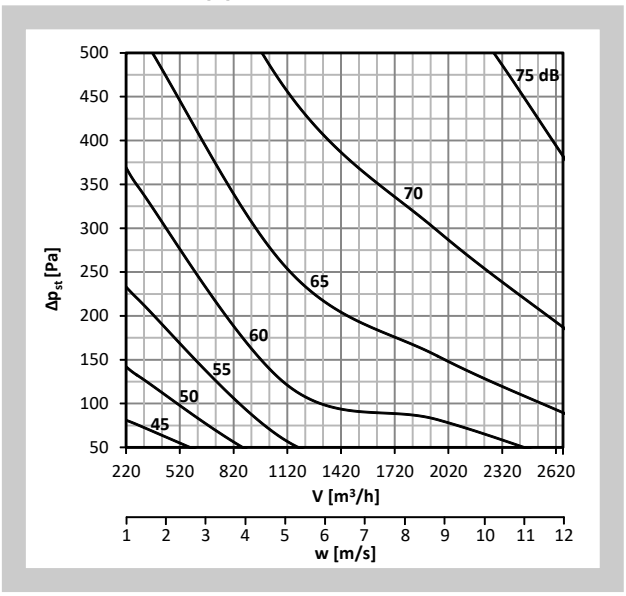

Diagram No. 11 Sound power level L_{WA} [dB(A)] inside the pipeline DN315

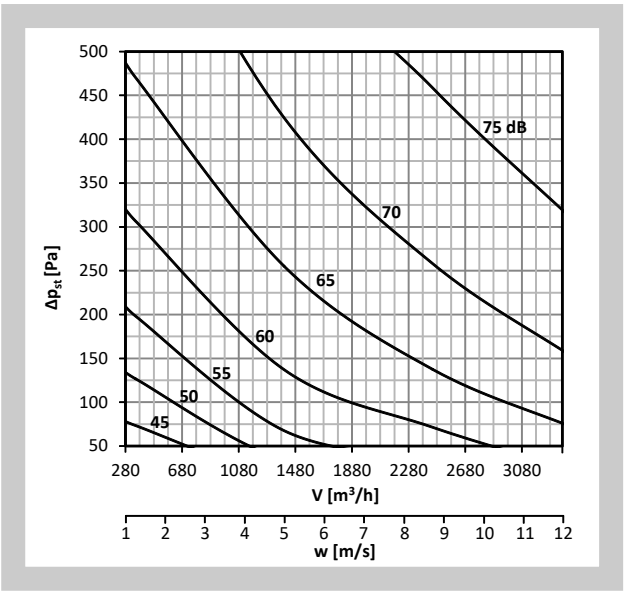

Diagram No. 12 Sound power level L_{WA} [dB(A)] inside the pipeline DN355

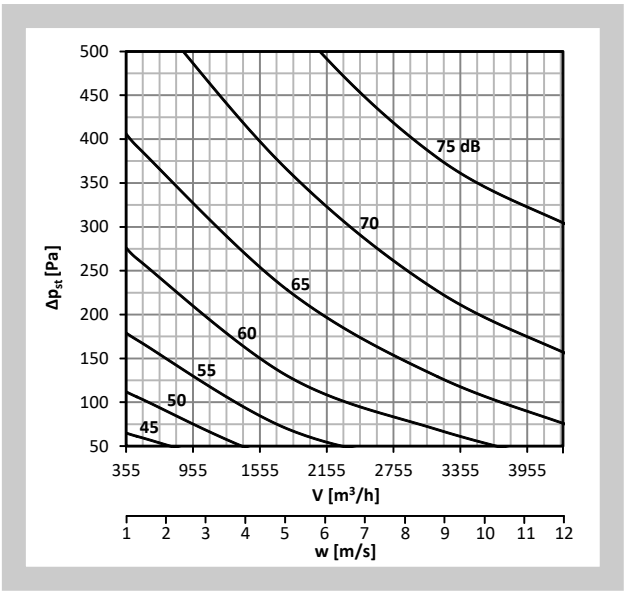

Diagram No. 13 Sound power level L_{WA} [dB(A)] inside the pipeline DN400

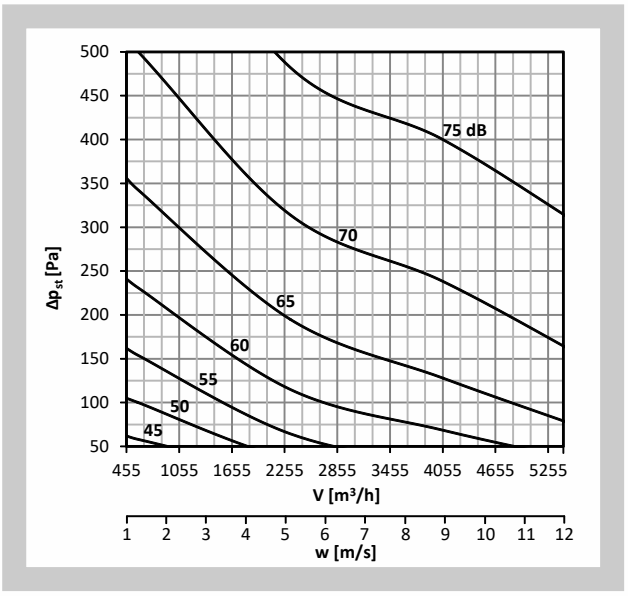

Diagram No. 14 Sound power level L_{WA} [dB(A)] inside the pipeline DN500

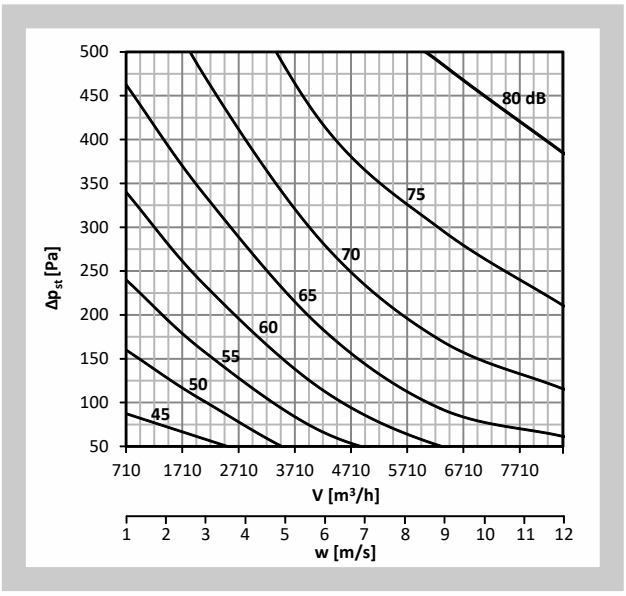

Diagram No. 15 Sound power level L_{WA} [dB(A)] inside the pipeline DN630

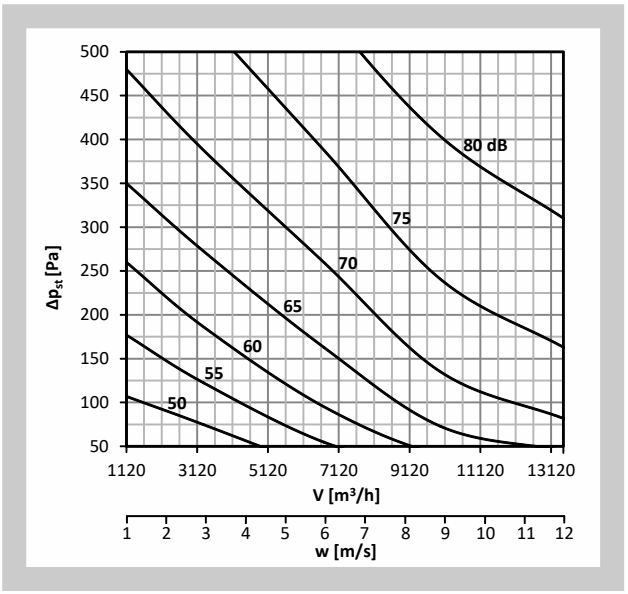

8.2. Radiated noise

The radiated noise of air volume controller is listed in Tab. 8.2.1.

$\mathring{V}$ [m³.h⁻¹] - air flow volume

Δp_{st} [Pa] - pressure differential

L_{WA} [dB(A)] - total level of acoustic power corrected by filter A

Tab. 8.2.1. Sound power level radiated outside the pipeline - without insulation

Size [mm]	$\mathring{V}$ [m³.h⁻¹]	L_{WA} [dB(A)]	L_{WA} [dB(A)]	L_{WA} [dB(A)]	L_{WA} [dB(A)]
		Δp_{st} = 50 Pa	Δp_{st} = 100 Pa	Δp_{st} = 250 Pa	Δp_{st} = 500 Pa
80	18	12	16	24	33
	88	24	29	38	47
	154	30	34	42	50
	220	35	39	47	54
100	30	14	18	27	37
	140	26	31	39	47
	245	33	38	45	52
	350	36	41	48	55

Size [mm]	$\dot{V}$ [m³.h⁻¹]	L_{WA} [dB(A)]	L_{WA} [dB(A)]	L_{WA} [dB(A)]	L_{WA} [dB(A)]
		Δp_{st} = 50 Pa	Δp_{st} = 100 Pa	Δp_{st} = 250 Pa	Δp_{st} = 500 Pa
125	45	15	19	28	38
	220	27	33	41	49
	385	33	38	45	52
	550	37	42	49	56
140	55	18	23	31	39
	280	29	34	42	50
	490	34	39	46	53
	700	39	44	50	56
160	70	21	26	33	42
	360	30	35	43	51
	630	34	39	47	54
	900	39	44	51	57
180	90	21	25	33	42
	480	31	36	44	52
	840	35	40	48	56
	1200	40	45	52	59
200	115	22	27	34	43
	560	31	36	44	52
	980	35	40	48	55
	1400	41	45	52	58
225	145	23	28	38	46
	720	33	38	46	53
	1260	37	42	49	56
	1800	42	46	53	59
250	180	25	30	39	47
	880	36	40	47	53
	1540	40	44	51	57
	2200	44	48	54	60
280	220	28	33	43	51
	1120	37	42	50	56
	1960	42	46	54	60
	2800	45	50	57	63
315	280	30	34	44	53
	1400	39	44	52	59
	2450	44	48	56	62
	3500	47	51	59	65
355	355	29	34	44	54
	1800	39	44	52	60
	3150	44	49	56	63
	4500	48	53	60	66
400	455	30	36	46	54
	2320	38	44	53	61
	4060	44	49	57	64
	5800	50	54	61	67
500	710	31	36	47	55
	4200	45	50	59	66
	6300	51	56	64	70
	8400	55	60	67	73
630	1120	40	44	52	60
	6700	52	57	64	70
	10000	56	61	68	74
	13300	59	64	71	77

Diagram No. 16 **Sound power level L_{WA} [dB(A)] radiated outside the pipeline DN80, without insulation**

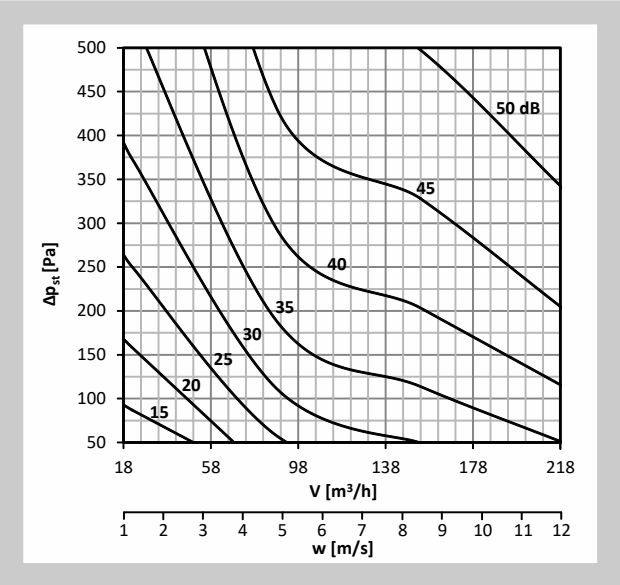

Diagram No. 17 **Sound power level L_{WA} [dB(A)] radiated outside the pipeline DN100, without insulation**

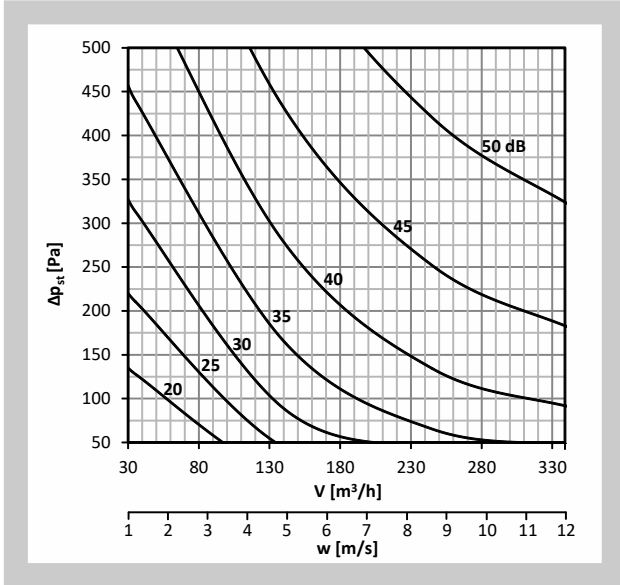

Diagram No. 18 **Sound power level L_{WA} [dB(A)] radiated outside the pipeline DN125, without insulation**

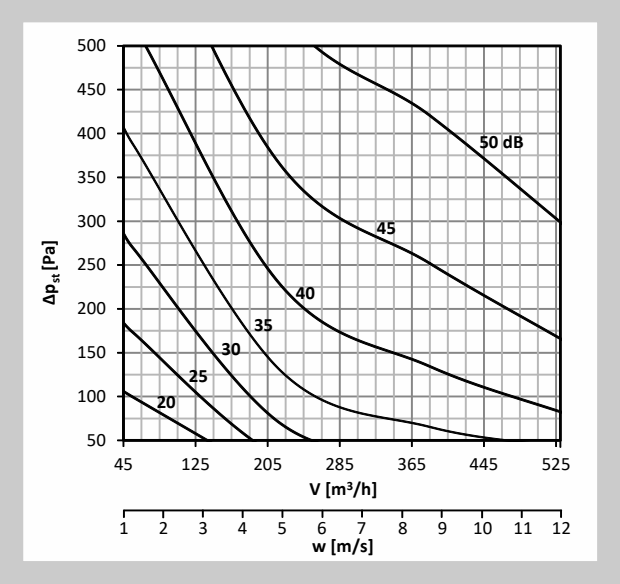

Diagram No. 19 **Sound power level L_{WA} [dB(A)] radiated outside the pipeline DN140, without insulation**

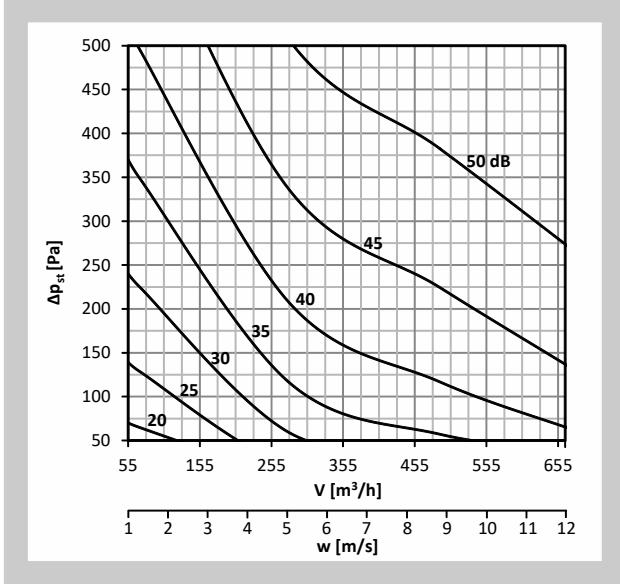

Diagram No. 20 **Sound power level L_{WA} [dB(A)] radiated outside the pipeline DN160, without insulation**

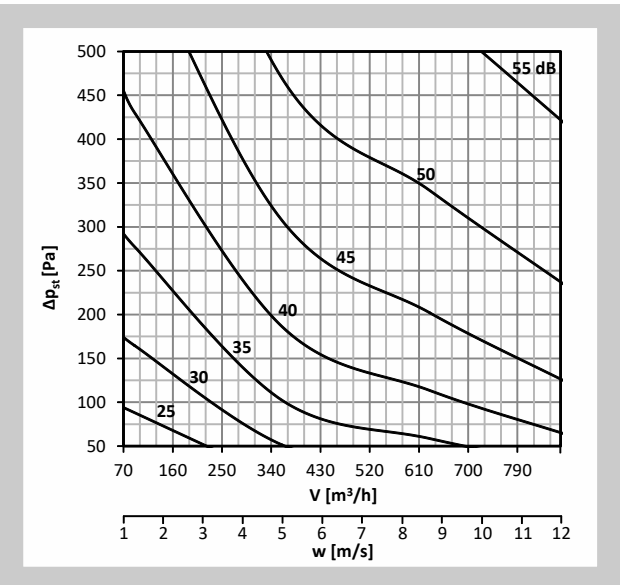

Diagram No. 21 **Sound power level L_{WA} [dB(A)] radiated outside the pipeline DN180, without insulation**

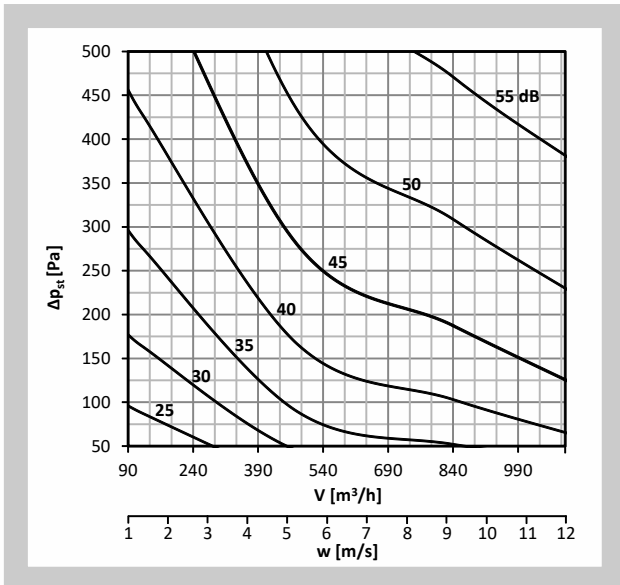

Diagram No. 22 Sound power level L_{WA} [dB(A)] radiated outside the pipeline DN200, without insulation

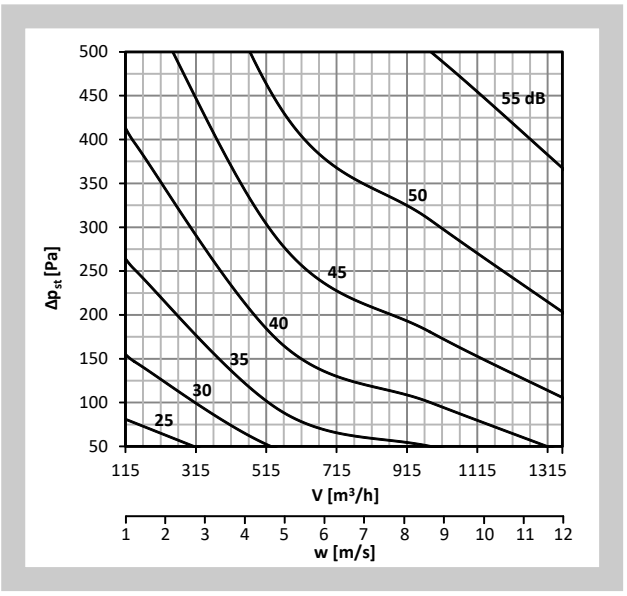

Diagram No. 23 Sound power level L_{WA} [dB(A)] radiated outside the pipeline DN225, without insulation

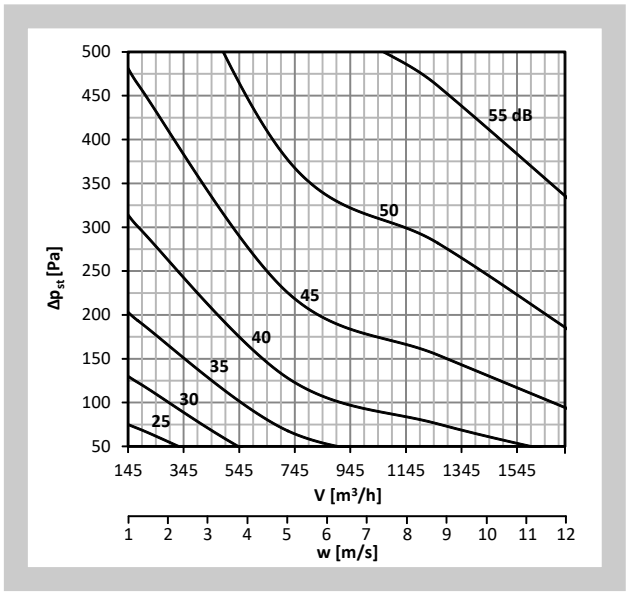

Diagram No. 24 Sound power level L_{WA} [dB(A)] radiated outside the pipeline DN250, without insulation

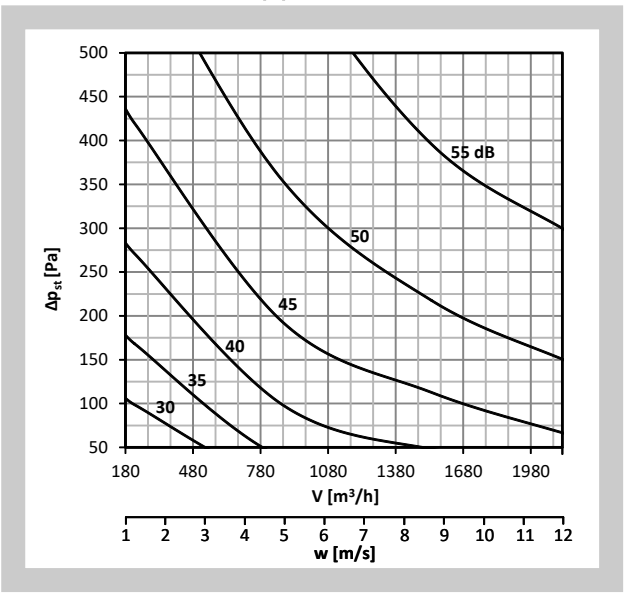

Diagram No. 25 Sound power level L_{WA} [dB(A)] radiated outside the pipeline DN280, without insulation

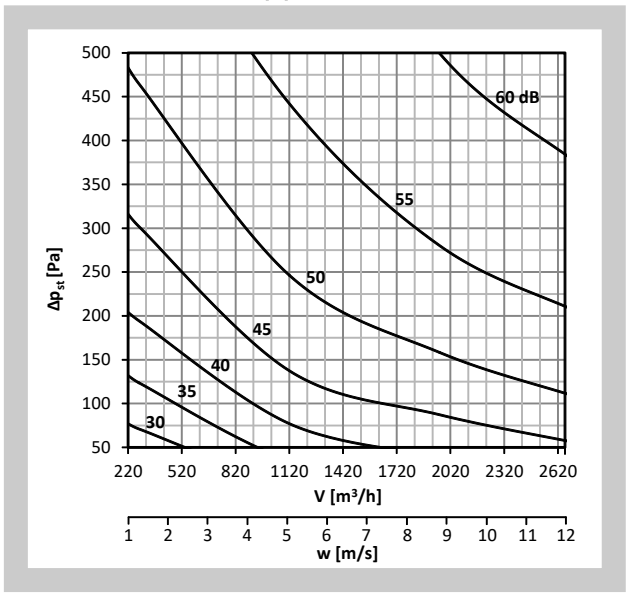

Diagram No. 26 Sound power level L_{WA} [dB(A)] radiated outside the pipeline DN315, without insulation

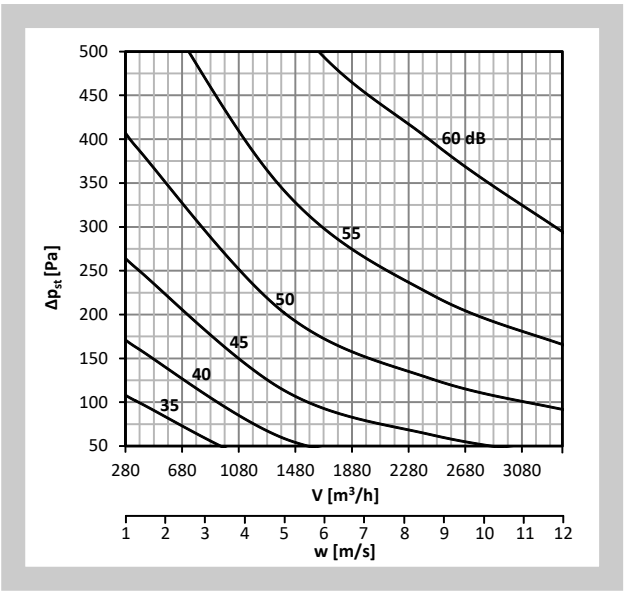

Diagram No. 27 Sound power level L_{WA} [dB(A)] radiated outside the pipeline DN355, without insulation

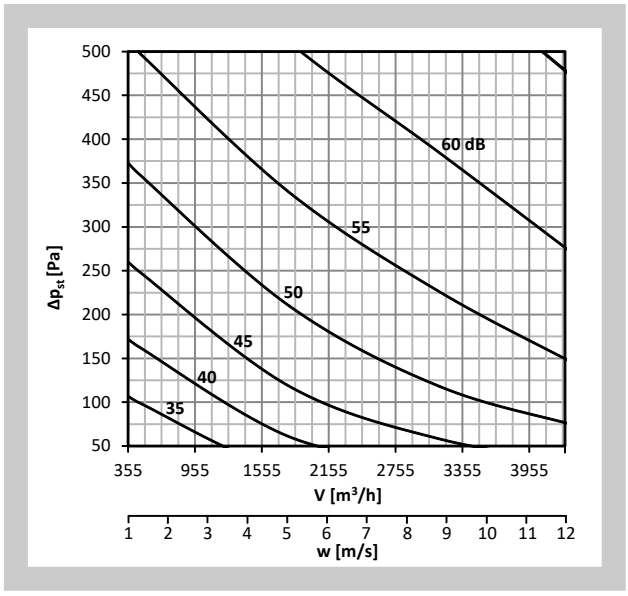

Diagram No. 28 Sound power level L_{WA} [dB(A)] radiated outside the pipeline DN400, without insulation

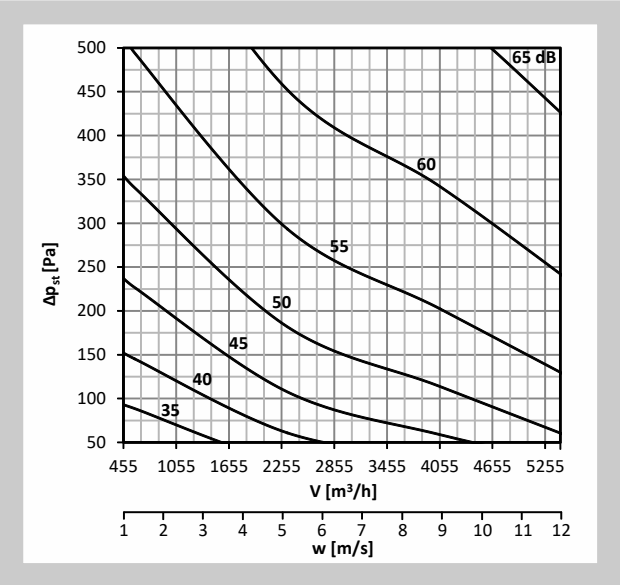

Diagram No. 29 Sound power level L_{WA} [dB(A)] radiated outside the pipeline DN500, without insulation

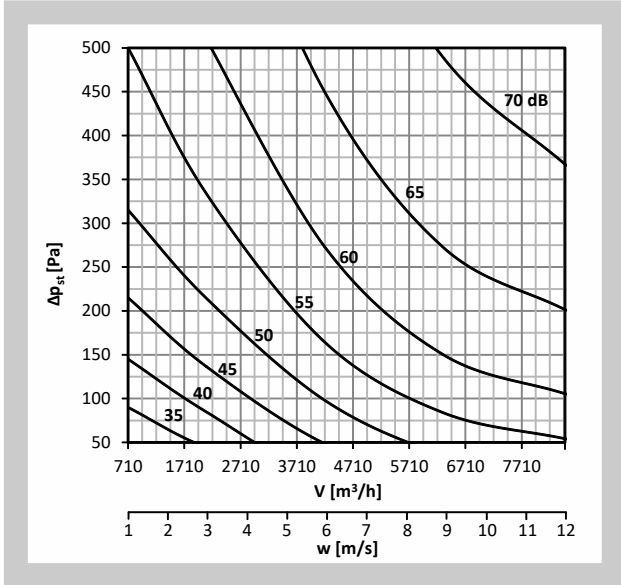

Diagram No. 30 Sound power level L_{WA} [dB(A)] radiated outside the pipeline DN630, without insulation

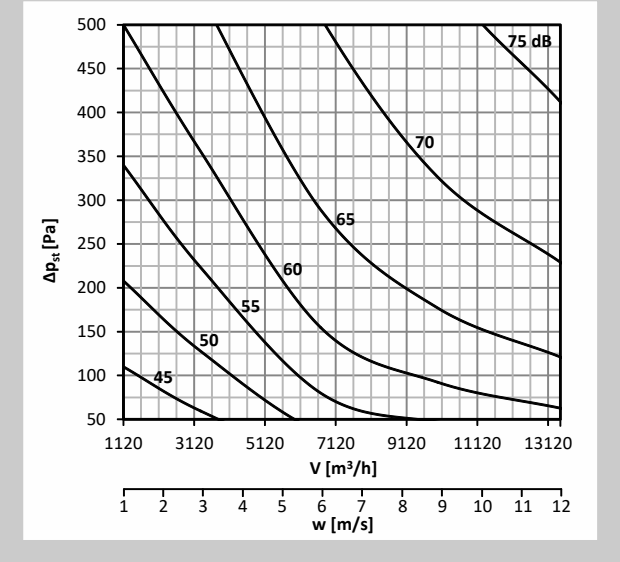

8.3. Radiated noise - with insulation

The radiated noise of air volume controller is listed in Tab. 8.3.1.

$\mathring{V}$ [m³.h⁻¹] - air flow volume

Δp_{st} [Pa] - pressure differential

L_{WA} [dB(A)] - total level of acoustic power corrected by filter A

Tab. 8.3.1. Sound power level radiated outside the pipeline - with insulation

Size [mm]	$\mathring{V}$ [m³.h⁻¹]	L_{WA} [dB(A)]	L_{WA} [dB(A)]	L_{WA} [dB(A)]	L_{WA} [dB(A)]
		Δp_{st} = 50 Pa	Δp_{st} = 100 Pa	Δp_{st} = 250 Pa	Δp_{st} = 500 Pa
80	18	8	11	17	24
	88	17	20	26	32
	154	24	27	32	37
	220	26	29	34	39
100	30	10	13	19	26
	140	18	22	27	33
	245	24	28	33	39
	350	27	31	36	41

Size [mm]	$\dot{V}$ [m³.h⁻¹]	L_{WA} [dB(A)]	L_{WA} [dB(A)]	L_{WA} [dB(A)]	L_{WA} [dB(A)]
		Δp_{st} = 50 Pa	Δp_{st} = 100 Pa	Δp_{st} = 250 Pa	Δp_{st} = 500 Pa
125	45	11	14	19	26
	220	19	22	27	32
	385	23	27	32	37
	550	26	29	34	39
140	55	13	16	22	27
	280	19	23	29	35
	490	25	29	35	41
	700	29	33	38	43
160	70	14	17	23	29
	360	20	24	30	36
	630	25	29	35	40
	900	29	33	38	43
180	90	12	15	18	23
	480	17	20	25	29
	840	22	25	30	34
	1200	26	29	33	37
200	115	12	15	19	24
	560	17	20	25	30
	980	23	26	31	35
	1400	27	30	34	38
225	145	13	16	21	26
	720	18	21	26	31
	1260	25	28	33	37
	1800	29	32	36	40
250	180	13	16	21	26
	880	20	23	28	32
	1540	26	29	34	38
	2200	31	34	38	42
280	220	15	18	23	28
	1120	21	24	29	33
	1960	27	30	35	39
	2800	31	34	39	43
315	280	16	19	24	28
	1400	22	25	30	35
	2450	31	34	39	43
	3500	38	41	46	50
355	355	15	18	24	31
	1800	24	27	33	38
	3150	33	36	41	46
	4500	37	40	45	49
400	455	17	20	26	31
	2320	25	28	34	39
	4060	32	36	41	46
	5800	36	40	45	49
500	710	20	24	31	36
	4200	32	36	43	48
	6300	38	43	49	54
	8400	43	47	52	57
630	1120	24	27	32	37
	6700	33	37	43	48
	10000	39	43	49	54
	13300	43	47	52	57

Diagram No. 31 Sound power level L_{WA} [dB(A)] radiated outside the pipeline DN80, with insulation

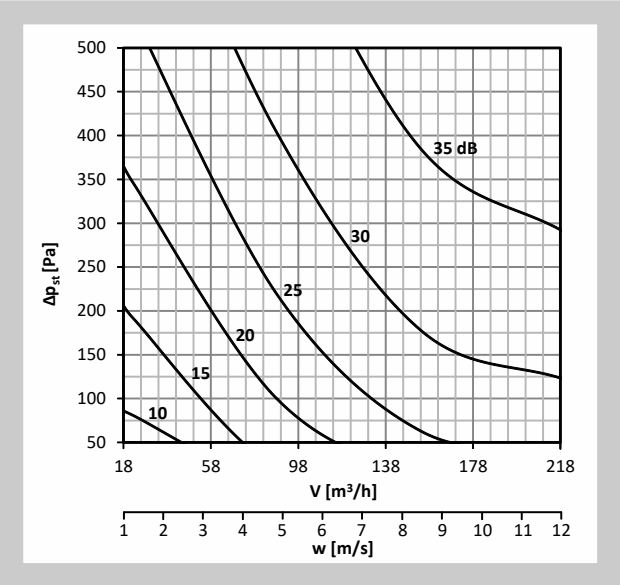

Diagram No. 32 Sound power level L_{WA} [dB(A)] radiated outside the pipeline DN100, with insulation

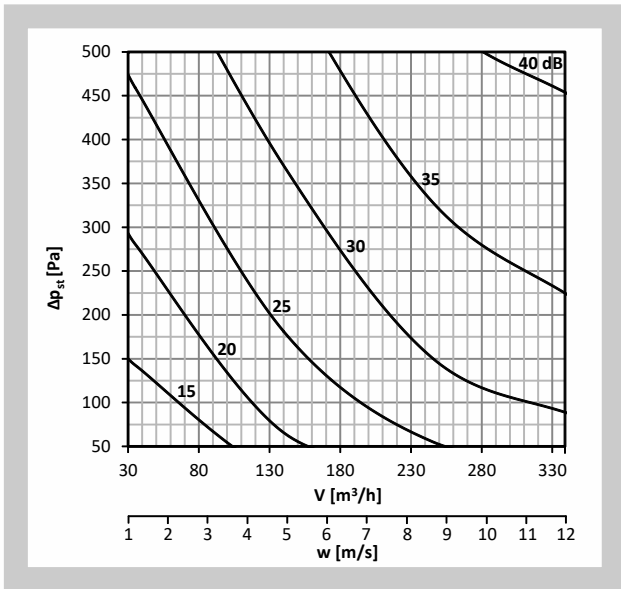

Diagram No. 33 Sound power level L_{WA} [dB(A)] radiated outside the pipeline DN125, with insulation

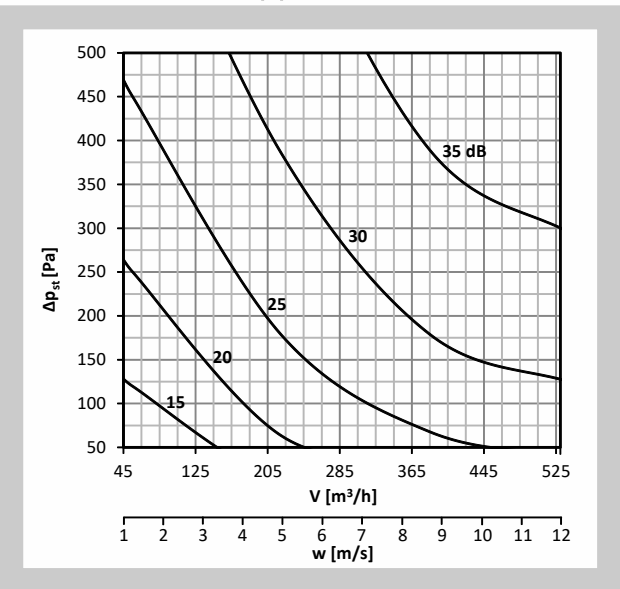

Diagram No. 34 Sound power level L_{WA} [dB(A)] radiated outside the pipeline DN140, with insulation

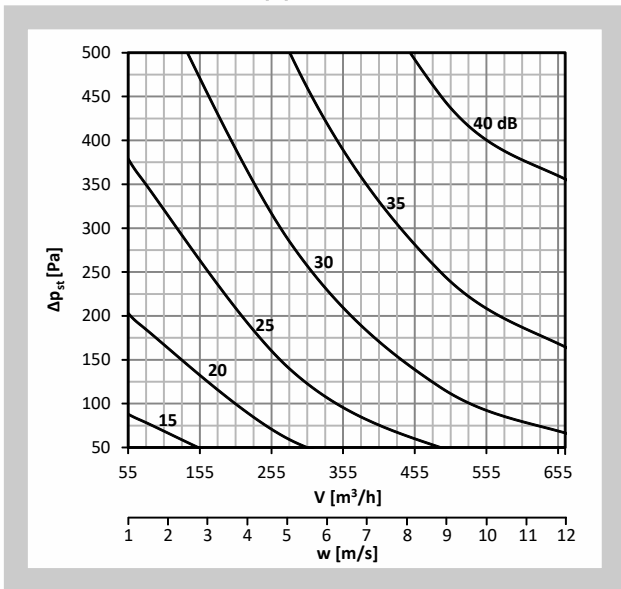

Diagram No. 35 Sound power level L_{WA} [dB(A)] radiated outside the pipeline DN160, with insulation

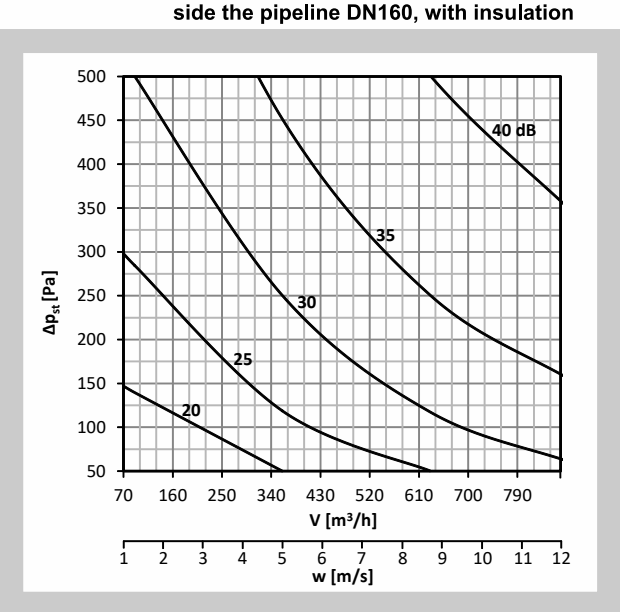

Diagram No. 36 Sound power level L_{WA} [dB(A)] radiated outside the pipeline DN180, with insulation

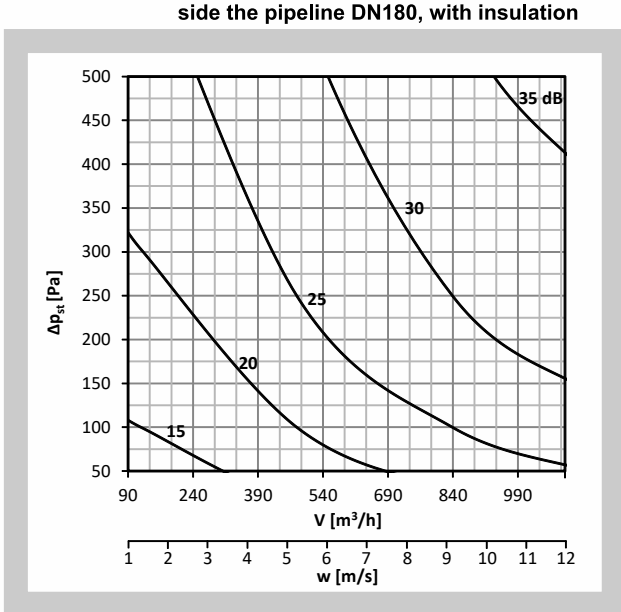

Diagram No. 37 Sound power level L_{WA} [dB(A)] radiated outside the pipeline DN200, with insulation

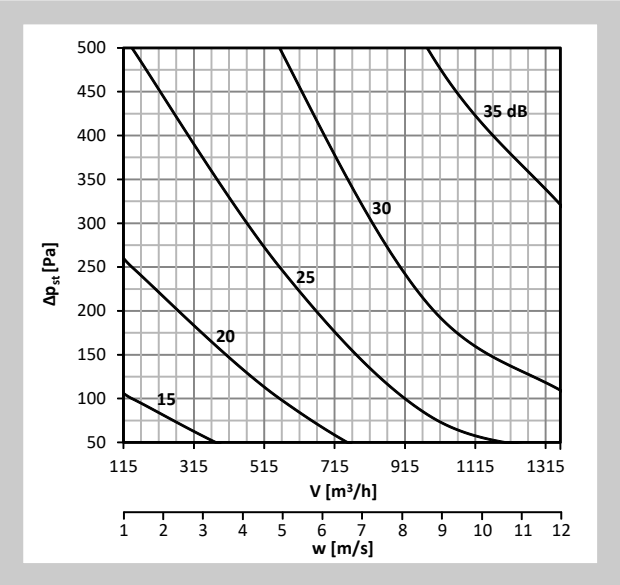

Diagram No. 38 Sound power level L_{WA} [dB(A)] radiated outside the pipeline DN225, with insulation

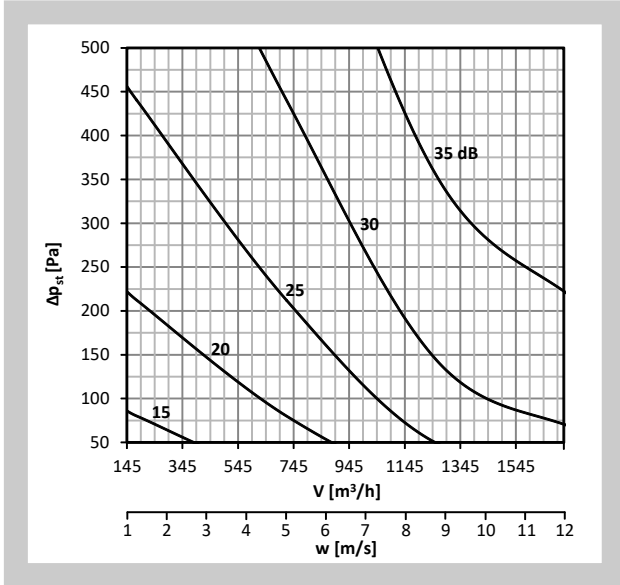

Diagram No. 39 Sound power level L_{WA} [dB(A)] radiated outside the pipeline DN250, with insulation

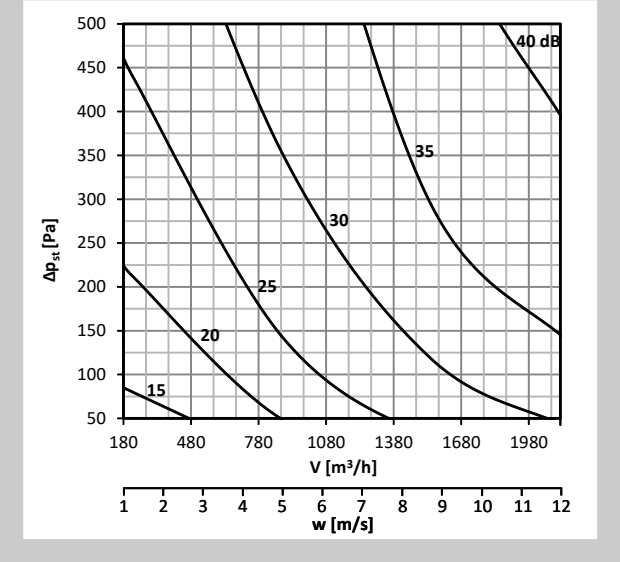

Diagram No. 40 Sound power level L_{WA} [dB(A)] radiated outside the pipeline DN280, with insulation

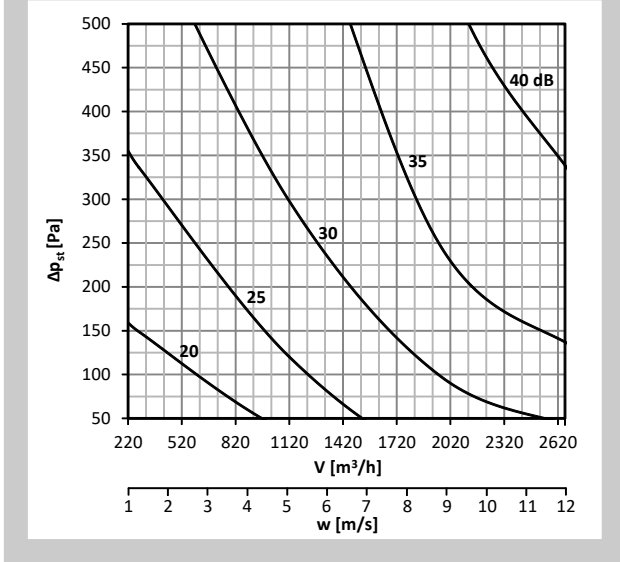

Diagram No. 41 Sound power level L_{WA} [dB(A)] radiated outside the pipeline DN315, with insulation

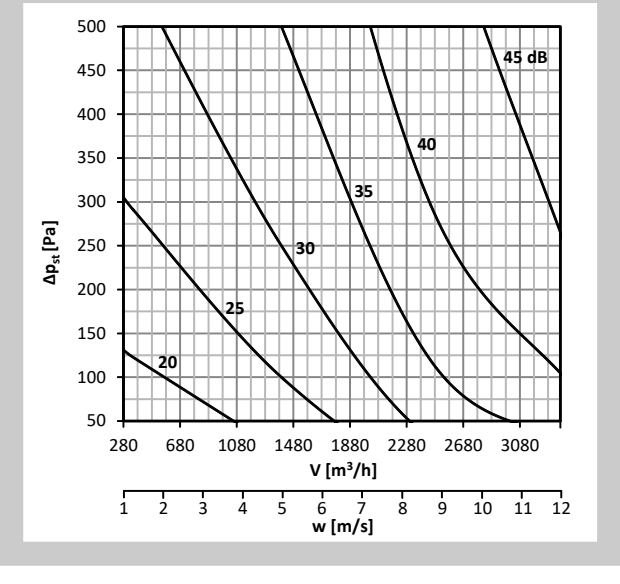

Diagram No. 42 Sound power level L_{WA} [dB(A)] radiated outside the pipeline DN355, with insulation

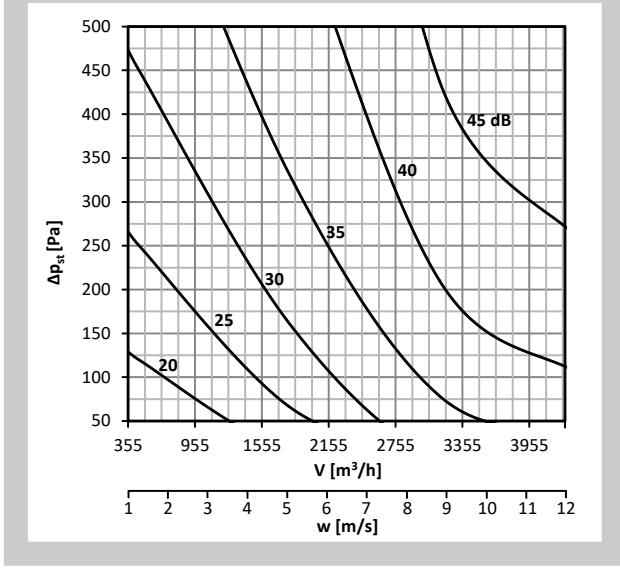

Diagram No. 43 Sound power level L_{WA} [dB(A)] radiated outside the pipeline DN400, with insulation

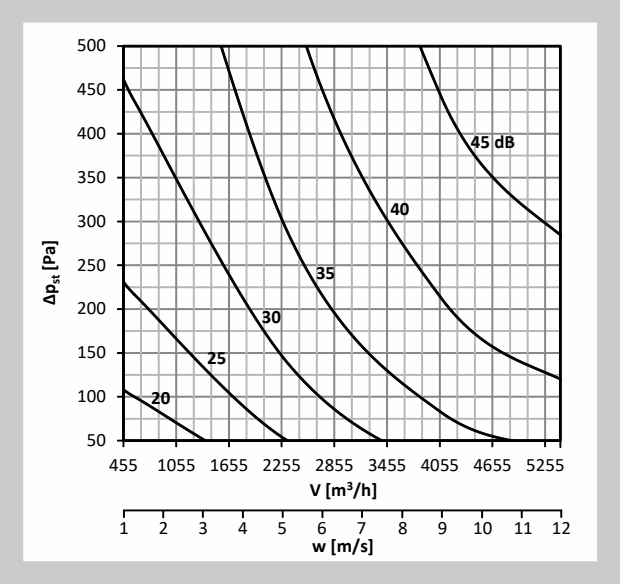

Diagram No. 44 Sound power level L_{WA} [dB(A)] radiated outside the pipeline DN500, with insulation

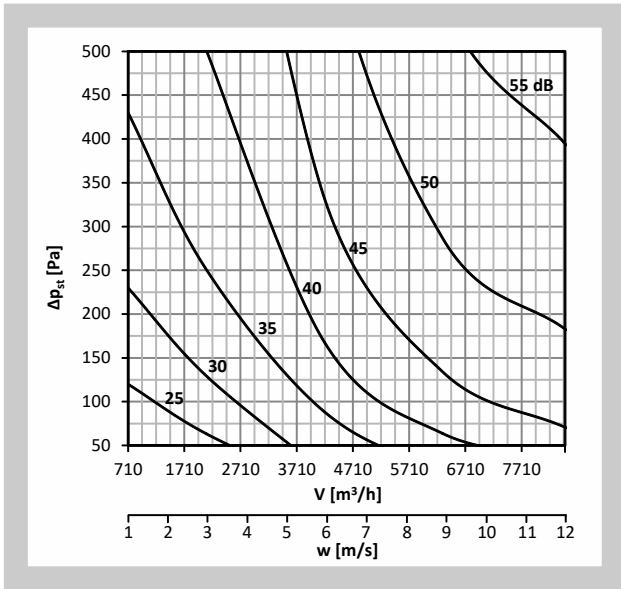

Diagram No. 45 Sound power level L_{WA} [dB(A)] radiated outside the pipeline DN630, with insulation

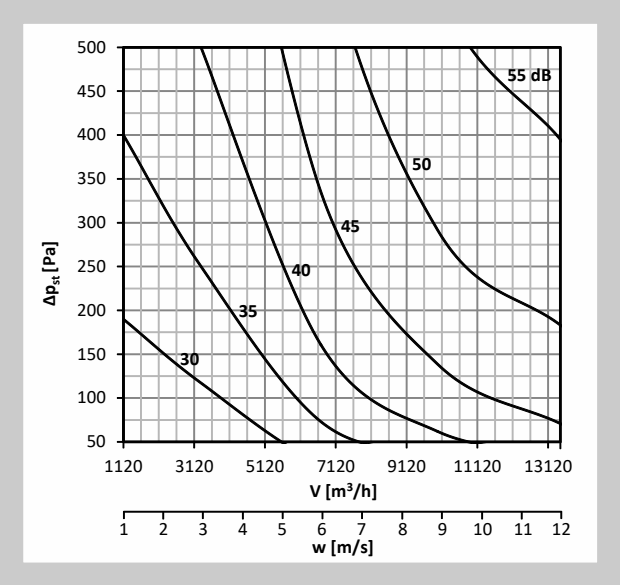

IV. VENTILATION SYSTEMS

9. Ventilation systems with controllers RPM-V

9.1. Flow control in the room using the Belimo wall-mounted device

Fig. 35 Device P-01RT-1x-0

Fig. 36 Device 22Rx-xx-x

Tab. 9.1.1.

Wall device	**22RT-18-1**	**22RTM-18-1**	**P-01RT-1x-0**
Measurement	Temperature	Temperature, relative humidity, Dew point, CO_2	Temperature
Resetting values	PC BelimoAssistent NFC	PC BelimoAssistent NFC	Rotary wheel
Power voltage	AC 24V, +-20%, 0.5W DC 24V, +- 20%, 1VA		
Connections	spring terminal block 0,25 ... 1,5 mm		
Output	control signal Y: 0 ... 10V, max. 1 mA		
Degree of protection	IP 30		
Protection class	III (Safety extra-low voltage)		
Temperature / ambient humidity	0...+50 °C / 20 ... Max 95% r.H. (non-condensing)		
Temperature / storage humidity	-20...+70 °C / 20 ... Max 95% r.H. (non-condensing)		

More sensor designs and information in the Belimo catalog.

V. MATERIAL, FINISHING

10. Material

10.1. The body of the controller and the controller blade are made of galvanized sheet. The blade is furnished with a silicon seal along its periphery. Controllers are with rubber tightness and glued all the way around. The controller is delivered without further surface treatment.

10.2. According to the customer's requirements, damper can be made of stainless material.
Specifications for stainless-steel models – classification of stainless steel:

- Class A2 – Food-grade stainless steel (AISI 304 – EN 17240)
- Class A4 – Chemistry-grade stainless steel (AISI 316, 316L – EN 17346, 17349)

The indicated metal is used for all metal components of the damper except the servo drive and its adapters.
The following components, including the fasteners, are made from stainless steel at all times:

1) Damper body and all components permanently attached
2) Leaf pins, metal components of the leaf
3) Pressure sensors inside the damper
4) Controlling components outside the damper (levers, control levers, metal part of the pin or the entire pin)
5) Servo drive mount
6) Insulation sheeting, if the damper is insulated

Plastic, rubber and silicon components, sealants, servo drives, and end switches are identical for all material variants of the dampers.
Some fasteners and components are available in one class of stainless steel; the type will be used in all stainless-steel variants.
Any other requirements for the design shall be considered atypical and shall be addressed on an individual basis.

VI. INSPECTION, TESTING

11. Inspection, testing

11.1. Dimensions are checked with standard gauges in accordance with the tolerated dimension standards used in air conditioning.

VII. TRANSPORTATION AND STORAGE

12. Logistic terms

12.1. Regulators are transported by box freight vehicles without direct weather impact, there must not occur any sharp shocks and ambient temperature must not exceed +40°C. Regulators must be protected against mechanic damages when transported and manipulated. During transportation, the regulator blade must be in the "CLOSED" position.

12.2. Regulators are stored indoor in environment without any aggressive vapours, gases or dust. Indoor temperature must be in the range from -5°C to +40°C and maximum relative humidity 80%. Regulators must be protected against mechanic damages when transported and manipulated.

VIII. ASSEMBLY, ATTENDANCE, MAINTENANCE AND REVISIONS

13. Assembly and set up

13.1. All effective safety standards and directives must be observed during air flow controller assembly.

The assembly consists of installing the controller in the air distribution system and if required, connecting the actuating mechanism to the electric net.

13.2. The reset of values $\dot{V}_{min}$ a $\dot{V}_{max}$ factory settings can be done in the following ways.

Belimo device

Using the adjustment by service tool ZTH-EU, which is designed for all Belimo actuators with interface contain PP (MP, …). Connection to actuator via service socket. Actuators can be adjusted and controlled over Plug and Play drives.

Setting can be made with the setup and programming software PC-Tool, that can be installed on a standard PC. The PC is connected to the actuator via the service socket.

Use the Belimo Assistant App, an app available for Android smartphones from version 4.4 and for iPhone devices with iOS 9 or later. This app can only be used with a Belimo device that has a built-in NFC interface.

The Iphone device requires a NFC converter ZIP-BT-NFC. This device can also be used for an Android device that does not support NFC.

Gruner device

Using the display on the actuator

Siemens device

Using the service tool AST20 (hand tool) or ACS941 (PC tool to be used with ATS 22).

More detailed information on the stated adjustment methods is given in the catalog of the actuator / controller manufacturer (Belimo, Gruner, Siemens).

IX. ORDERING INFORMATION

14. Ordering key

1	2	3	4	5	6	7
RPM-V	DN 200	.G62F	12	RS -	ZN	I

EXAMPLE:

RPM-V DN 200 .G62F 12 RS-ZN I

Circular variable airflow regulator RPM-V, dimension DN 200 mm, pressure control design – GRUNER with spring return, dynamic measurement / analogue PP-Bus / controller GUAC-PM-DD3 + 341C-024-..-V/ST06, nominal air velocity 12 m/s, straight connection to circular duct, galvanized material variant, with insulation.

1| Regulator type - RPM-V

2| Regulator dimensions øD → see page 16

3| Regulator design → see page 41

Extended list of designs available for download HERE

4| Nominal air velocity

	Nominal air velocity 7 m/s
12	Nominal air velocity 12 m/s

5|Duct connection

RS	Straight connection to circular duct
RF	Flanged connection to circular duct

6| Material and other design options

ZN	Galvanized
A2	Stainless steel 1.4301 (AISI 304)
A4	Stainless steel 1.4404 (AISI 316L)

7|Insulation

	Without insulation
I	With insulation

- *The standard operating mode is set for DC 2...10 V. If is it requested by customer, it can be set for DC 0...10 V.*
- *The values of air volume $\dot{V}_{min}$ and $\dot{V}_{max}$ will be set by the manufacturer according to the customer's order.*
- *The pressure values P_{min} and P_{max} will be set according to the customer's order.*
- *If the customer does not determine the required values, the values will be set according to TPM resp. at pressure P_{min} to 0 Pa and P_{max} to the maximum value of the pressure sensor.*
- *These values can be subsequently reset by means of the instrument ZTH-EU, or by the PC software PC-Tool or via the Belimo Assistant App. For Gruner actuators, it is possible to additionally reset the values of $\dot{V}_{min}$ / $\dot{V}_{max}$ and the operating mode using a display on the actuator.*

Tab. 14.1.1. Dampers design

Design list for variable airflow regulator- RPM-V						Sensor range	Design
Air flow	BELIMO compact solution (sensor, controller and actuator in one box)	Without the spring	Dynamic	Analog MPBus	LMV-D3-MP (5 N.m, NMV-D3-MP 10 N.m, SMV-D3-MP 20 N.m)	0...500Pa	B01
				Modbus RTU BACnet MPBus	LMV-D3-MOD (5 N.m, NMV-D3-MOD 10 N.m, SMV-D3-MOD 20 N.m)	0...500Pa	B02
				KNX	LMV-D3-KNX (5 N.m, NMV-D3-KNX 10 N.m)	0...500Pa	B04
	GRUNER compact solution (sensor, controller and actuator in one box)	Without the spring	Dynamic	Analog PP-Bus	327VM-024-05 (5 N.m, 327VM-024-10 10 N.m, 327VM-024-15 15 N.m.)	0…500 Pa	G00
				Modbus RTU	327VM-024-05-MB (5 N.m, 327VM-024-10-MB 10 N.m, 327VM-024-15-MB 15 N.m.)	0…500 Pa	G02
	SIEMENS compact solution (sensor, controller and actuator in one box)	Without the spring	Dynamic	Analog PP-Bus	GDB181.1E/3 (5 N.m, (GLB181.1E/3 10 N.m)	0…500 Pa	S00
				Modbus RTU	GDB181.1E/MO (5 N.m, (GLB181.1E/MO 10 N.m)	0…500 Pa	S02
				KNX	GDB181.1E/KN (5 N.m, (GLB181.1E/KN 10 N.m)	0…500 Pa	S04
				BACnet	GDB181.1E/BA (5 N.m, (GLB181.1E/BA 10 N.m)	0…500 Pa	S05
Pressure	BELIMO sensor, controller and actuator all in separate boxes	Without the spring	Static	Analog MP-Bus	Controller VRU-M1-BAC (STP) + LM24A-VST (5 N.m., NM24A-VST 10 N.m, SM24A-VST 20 N.m)	0…600 Pa	B75
				Modbus RTU BACnet	Controller VRU-M1-BAC (STP) + LM24A-VST (5 N.m., NM24A-VST 10 N.m, SM24A-VST 20 N.m)	0…600 Pa	B78
		With the spring	Static	Analog MP-Bus	Controller VRU-M1R-BAC (STP) + LF24-VST (4 N.m, NF24A-VST 10 N.m, SF24A-VST 20 N.m)	0…600 Pa	B75F
				Modbus RTU BACnet	Controller VRU-M1R-BAC (STP) + LF24-VST (4 N.m, NF24A-VST 10 N.m, SF24A-VST 20 N.m)	0…600 Pa	B78F
		Speed actuator / With the spring	Static	Analog MP-Bus	Controller VRU-M1-BAC (STP) + LMQ24A-VST (4 N.m., NMQ24A-VST 8 N.m)	0…600 Pa	B75Q
				Modbus RTU BACnet	Controller VRU-M1-BAC (STP) + LMQ24A-VST (4 N.m., NMQ24A-VST 8 N.m)	0…600 Pa	B78Q
	GRUNER compact solution (sensor, controller and actuator in one box)	Without the spring	Dynamic	Analog PP-Bus	327VM-024-05/CCOL (5 N.m, 327VM-024-10/CCOL 10 N.m, 327VM-024-15/CCOL 15 N.m.)	0…500 Pa	G50
				Modbus RTU	327VM-024-05-MB (CCPC) (5 N.m, 327VM-024-10-MB (CCPC) 10 N.m, 327VM-024-15-MB (CCPC) 15 N.m.)	0…500 Pa	G52
	GRUNER sensor, controller and actuator all in separate boxes	Without the spring	Dynamic	Analog PP-Bus	Controller GUAC-PM-DD3 + 227C-024-05-V/ST06 (5 N.m, 227C-024-10-V/ST06 10 N.m, 227C-024-15-V/ST06 15 N.m, 363C-024-20-V/ST06 20N.m)	0…300 Pa	G62
				Modbus RTU	Controller GUAC-PM-DD3-MB + 227C-024-05-V/ST06 (5 N.m, 227C-024-10-V/ST06 10 N.m, 227C-024-15-V/ST06 15 N.m, 363C-024-20-V/ST06 20N.m)	0…300 Pa	G64
			Static	Analog PP-Bus	Controller GUAC-PM1 + 227C-024-05-V/ST06 (5 N.m, 227C-024-10-V/ST06 10 N.m, 227C-024-15-V/ST06 15 N.m, 363C-024-20-V/ST06 20N.m)	0…100 Pa	G70
					Controller GUAC-PM3 + 227C-024-05-V/ST06 (5 N.m, 227C-024-10-V/ST06 10 N.m, 227C-024-15-V/ST06 15 N.m, 363C-024-20-V/ST06 20N.m)	0…300 Pa	G71
					Controller GUAC-PM6 + 227C-024-05-V/ST06 (5 N.m, 227C-024-10-V/ST06 10 N.m, 227C-024-15-V/ST06 15 N.m, 363C-024-20-V/ST06 20N.m)	0…600 Pa	G72
				Modbus RTU	Controller GUAC-PM1-MB + 227C-024-05-V/ST06 (5 N.m, 227C-024-10-V/ST06 10 N.m, 227C-024-15-V/ST06 15 N.m, 363C-024-20-V/ST06 20N.m)	0…100 Pa	G76
					Controller GUAC-PM3-MB + 227C-024-05-V/ST06 (5 N.m, 227C-024-10-V/ST06 10 N.m, 227C-024-15-V/ST06 15 N.m, 363C-024-20-V/ST06 20N.m)	0…300 Pa	G77
					Controller GUAC-PM6-MB + 227C-024-05-V/ST06 (5 N.m, 227C-024-10-V/ST06 10 N.m, 227C-024-15-V/ST06 15 N.m, 363C-024-20-V/ST06 20N.m)	0…600 Pa	G78
		With the spring	Dynamic	Analog PP-Bus	Controller GUAC-PM-DD3 + 341C-024-05-V/ST06 (5 N.m, 361C-024-10-V/ST06 10 N.m, 361C-024-20-V/ST06 20 N.m)	0…300 Pa	G62F
				Modbus RTU	Controller GUAC-PM-DD3-MB + 341C-024-05-V/ST06 (5 N.m, 361C-024-10-V/ST06 10 N.m, 361C-024-20-V/ST06 20 N.m)	0…300 Pa	G64F
			Static	Analog PP-Bus	Controller+pressure sensor GUAC-PM1 + 341C-024-05-V/ST06 (5 N.m, 361C-024-10-V/ST06 10 N.m, 361C-024-20-V/ST06 20 N.m)	0…100 Pa	G70F
					Controller+pressure sensor GUAC-PM3 + 341C-024-05-V/ST06 (5 N.m, 361C-024-10-V/ST06 10 N.m, 361C-024-20-V/ST06 20 N.m)	0…300 Pa	G71F
					Controller+pressure sensor GUAC-PM6 + 341C-024-05-V/ST06 (5 N.m, 361C-024-10-V/ST06 10 N.m, 361C-024-20-V/ST06 20 N.m)	0…600 Pa	G72F
				Modbus RTU	Controller GUAC-PM1-MB + 341C-024-05-V/ST06 (5 N.m, 361C-024-10-V/ST06 10 N.m, 361C-024-20-V/ST06 20 N.m)	0…100 Pa	G76F
					Controller GUAC-PM3-MB + 341C-024-05-V/ST06 (5 N.m, 361C-024-10-V/ST06 10 N.m, 361C-024-20-V/ST06 20 N.m)	0…300 Pa	G77F
					Controller GUAC-PM6-MB + 341C-024-05-V/ST06 (5 N.m, 361C-024-10-V/ST06 10 N.m, 361C-024-20-V/ST06 20 N.m)	0…600 Pa	G78F
Pressure in the room	BELIMO sensor, controller and actuator all in separate boxes	Without the spring	Static	Analog MP-Bus	Controller VRU-M1R-BAC (STP) + LM24A-VST (5 N.m., NM24A-VST 10 N.m, SM24A-VST 20 N.m)	-75…+75	B91
				Modbus RTU BACnet	Controller VRU-M1R-BAC (STP) + LM24A-VST (5 N.m., NM24A-VST 10 N.m, SM24A-VST 20 N.m)	-75…+75	B92
		With the spring	Static	Analog MP-Bus	Controller VRU-M1R-BAC (STP) + LF24-VST (4 N.m, NF24A-VST 10 N.m, SF24A-VST 20 N.m)	-75…+75	B91F
				Modbus RTU BACnet	Controller VRU-M1R-BAC (STP) + LF24-VST (4 N.m, NF24A-VST 10 N.m, SF24A-VST 20 N.m)	-75…+75	B92F
		Speed actuator With the spring	Static	Analog MP-Bus	Controller VRU-M1-BAC (STP) + LMQ24A-VST (4 N.m., NMQ24A-VST 8 N.m)	-75…+75	B91Q
				Modbus RTU BACnet	Controller VRU-M1-BAC (STP) + LMQ24A-VST (4 N.m., NMQ24A-VST 8 N.m)	-75…+75	B92Q

*** You will find an extended overview of the design in the "Technical documentation" folder for the RPM-V product at www.mandik.cz**

The producer reserves the right for innovations of the product.
For actual product information see www.mandik.com

MANDÍK®

www.mandik.com

MANDÍK, a.s. • Dobříšská 550 • 267 24 Hostomice • Czech Republic • Tel.: +420 311 706 742 • E-Mail: mandik@mandik.cz