MANDÍK

TPM 165/22
Version 2026-09-24

FDMR

Fire damper

Technical Documentation
Installation, Commissioning, Operation, Maintenance and Service Manual

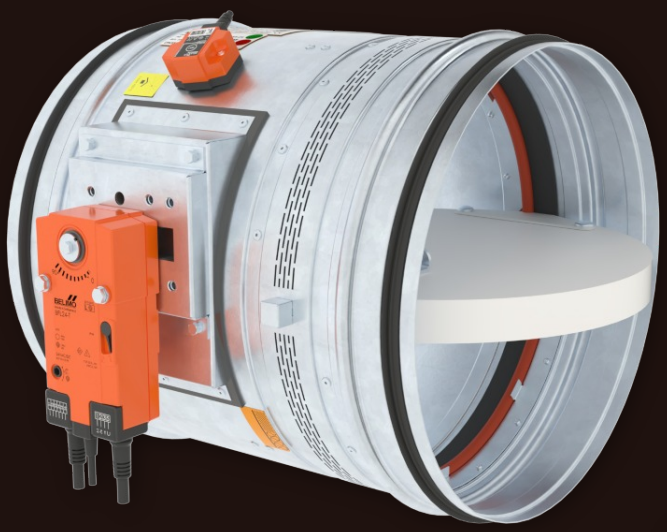

UK CA 2822

CE 1391

CCPi ASSESSED PRODUCT INFORMATION 015800191/1227 Fire dampers

MANDÍK®
www.mandik.co.uk

Manufacturer
MANDÍK, a. s. • Dobříšská 550 • 267 24 Hostomice • Czech Republic • Tel.: +420 311 706 742 • E-Mail: mandik@mandik.cz
Authorized representative
MANDIK UK Ltd • 130 Aztec West • Bristol BS32 4UB • United Kingdom • Tel.: +44 117 4526376 • E-Mail: help@mandik.co.uk

These technical specifications state a row of manufactured sizes and models of fire dampers FDMR.
It is valid for production, designing, ordering, delivery, maintenance and operation.

CONTENT

I. GENERAL....3
Description....3
II. DESIGN....4
Design with manual control....4
Design with spring return actuator....6
Communication and control module MDCM....11
III. DIMENSIONS....12
Technical parameters....17
IV. INSTALLATION....18
Placement and installation....18
Statement of installations....20
Installation in solid wall construction....21
Installation in gypsum wall construction....23
Installation in solid ceiling construction....25
V. SUSPENSION SYSTEMS....26
Example of duct connection....28
VI. TECHNICAL DATA....29
Pressure loss....29
Noise data....30
VII. MATERIAL, FINISHING....31
VIII. TRANSPORTATION AND STORAGE....32
Logistic terms....32
IX. ASSEMBLY, ATTENDANCE AND MAINTENANCE....32
Entry into service and revisions....35
X. ORDERING INFORMATIONS....37
Ordering key....37
Accessories....38
Data label....38

I. GENERAL

Description

Fire dampers are shutters in ducts of air-conditioning devices that prevent the spread of fire and combustion products from one fire segment to the other one by means of closing the duct in the points of fire separating constructions.

Damper blade automatically closes air duct using a closing spring or a spring return actuator. The closing spring is actuated by pressing a button on the manual control or by melting a fusible link.

The return spring of the actuator is actuated when a thermoelectric activation device BAT is activated, when a test button on BAT is pressed or when power supply of the actuator is interrupted.

After closing the blade, the damper is sealed with silicon against smoke penetration. On request by customer, the damper can be supplied silicon-free. In the closed position, the damper is also sealed with material which increases its volume due to increasing temperature and air proofs the air duct.

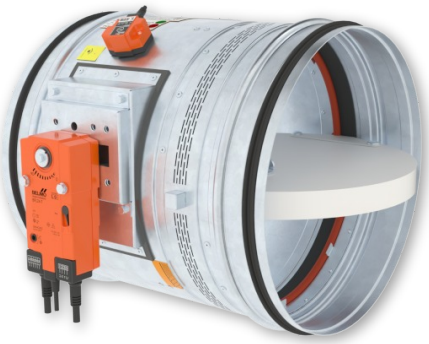

FDMR with spring return actuator

FDMR with manual control

Damper characteristics

- CE certified acc. to BS EN 15650
- Tested in accordance with BS EN 1366-2
- Classified acc. to BS EN 13501-3+A1
- External Casing leakage class min. ATC 3 (old marking “C“) acc. to BS EN 1751
- Internal leakage min. class 3 acc. to BS EN 1751
- Cycling test in class C_{10000} acc. to BS EN 15650
- Corrosion resistant acc. to BS EN 15650
- Certificate of constancy of performance UKCA No. 2822-UKCA-CPR-XXXX
- Certificate of constancy of performance CE No. 1391-CPR-XXXX/XXXX
- Declaration of Perfomance UKCA No. PM/FDMR/02/XX/X
- Declaration of Perfomance CE No. PM/FDMR/01/XX/X
- Hygienic assessment of fire dampers - Report No. 1.6/pos/19/19b

Working conditions

- Exact damper function is provided under the following conditions:
  - maximum air velocity 12 m/s
  - maximum pressure difference 1200 Pa
  - the air circulation in the whole damper section must be secured steady over the entire surface.
- Dampers can be installed in arbitrary position
- Dampers are suitable for systems without abrasive, chemical and adhesive particles.
- Dampers are designed for macroclimatic areas with mild climate according to BS EN IEC 60 721-3-3 ed.2., class 3K22. (Environment 3K22 is typically protected place with regulated temperature)
- Temperature in the place of installation is permitted to range from -30°C to +50°C.

II. DESIGN

Design with manual control

Design .01

- Design with manual control with a fusible link which actuates the shutting device, after the nominal activation temperature 72°C has been reached.
- Automatic initiation of the manual control is not activated if the temperature does not exceed 70°C.
- In case that other activation temperatures are required, fusible links with nominal activation temperature +104°C or +147°C can be supplied (this requirement must be specified in the order).

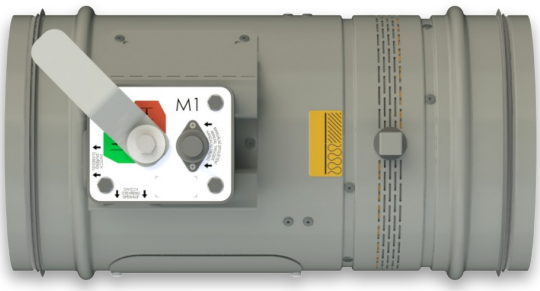

Design .01

ATTENTION:

- Manual controls are produced in five sizes M1 to M5, difference is only in size of a closing spring, which closes the fire damper.
- For the size of fire dampers is always assigned the size of the manual control → see page 17
- It is not recommended to use different size of the manual control than given by the manufacturer, otherwise there is a risk of damaging the fire damper.

Design .11

- Design .01 with manual control can be complemented with a limit switch signaling of the damper blade position "CLOSED".
- Cable is connected directly to limit switch.
- Limit switch detail → see page 5

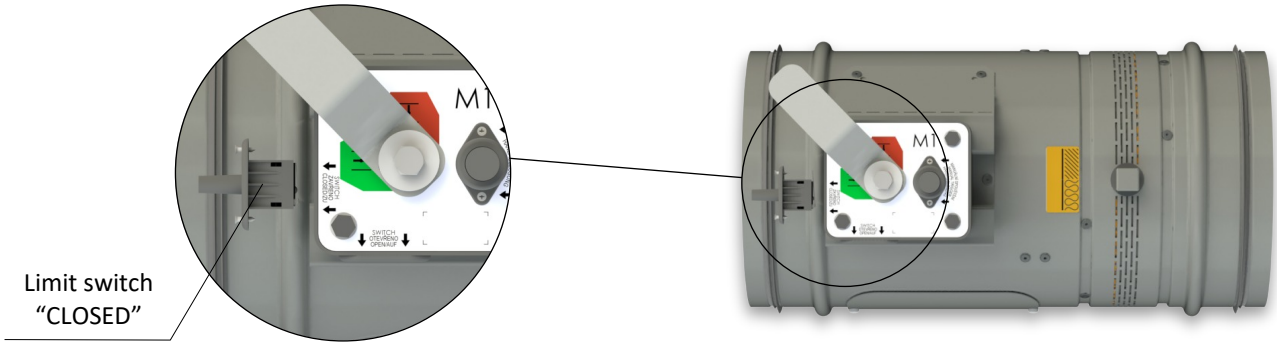

Design .11

Design .80

- Design .01 with manual control can be complemented with two limit switches signaling of the damper blade position "CLOSED" and "OPEN".
- Cables are connected directly to limit switches.
- Limit switch detail → see page 5

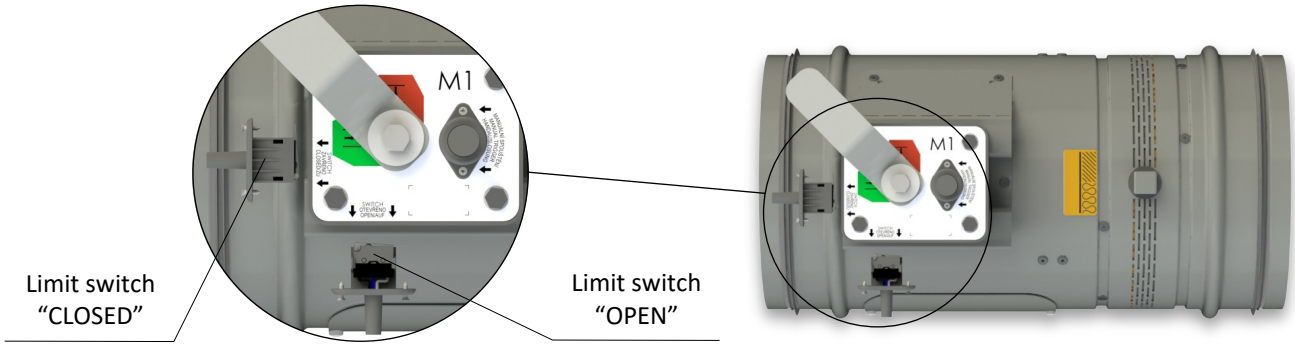

Design .80

Manual control

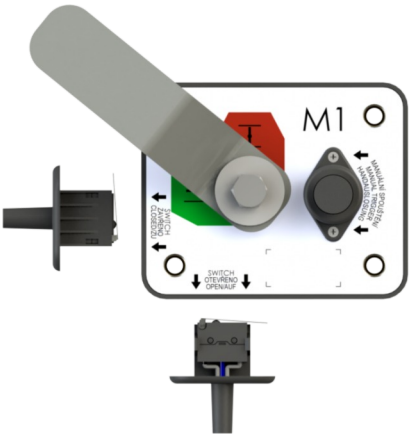

Fusible link replacement:*

1. The mechanism (damper) must be in the closed position (indicated by the red area on the sticker).
2. Press the Close button.
3. Using adjustable pliers, squeeze the fusible link clips together.
4. Pull the fusible link out of the clips.
5. Using adjustable pliers, squeeze the fusible link clips together again.
6. Insert the new fusible link into the clips.

Function check:**

7. Open the mechanism (damper) by moving the lever to the Open position (indicated by the green area on the sticker).
8. Press the Close button and check that the mechanism closes correctly. Repeat steps 7 and 8 at least 3 times.

* The mechanism can be removed for change of the fusible link.
** Caution: Risk of injury from moving parts.

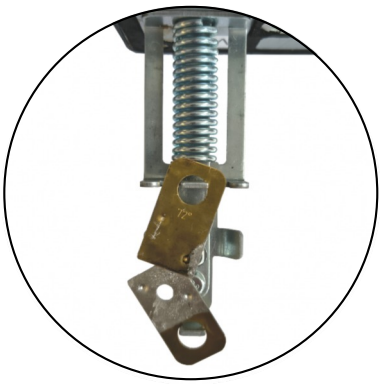

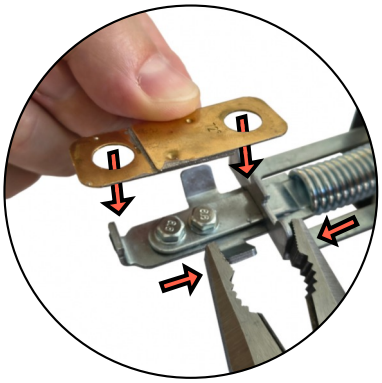

Limit switch G905-300E03W1

<u>This limit switch is possible to connect in two following ways</u>

- CUT-OFF if the arm is moving … connect wire 1+2
- SWITCH-ON if the arm is moving … connect wire 1+4

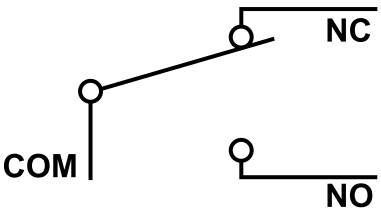

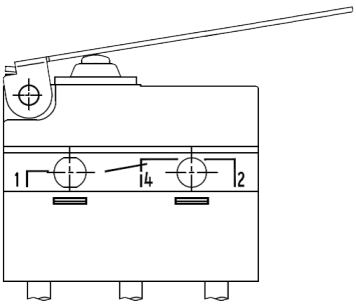

Nominal voltage and maximal current	AC 230V / 5A
Class of protection	IP 67
Working temperature	-25°C … +120°C

1(COM) - black wire
2(NC) - gray wire
4(NO) - blue wire

Design with spring return actuator

Design .40 and .50

- The fire dampers are equipped with Belimo spring return actuators with thermoelectric activation device BAT. The spring return actuator types are BFL, BFN or BF depending on the damper size. (Further mentioned as „actuator“).
- After being connected to power supply 230V or AC/DC 24V, the actuator rotates the damper blade to the operating position "OPEN" and at the same time pre-stretches its return spring.
- When the actuator is power supplied, the damper blade is in the position "OPEN" and the return spring is pre-stretched.
- Time needed for full opening of the damper blade from the position "CLOSED" to the position "OPEN" is maximum 120 sec. If the actuator power supply is interrupted (due to loss of supply voltage, or pressing a test button on the thermoelectric activation device BAT), the actuator rotates the damper blade to the breakdown position "CLOSED".
- The time of closing the damper blade from the position "OPEN" to the position "CLOSED" takes maximum 20 sec.
- In case that the power supply is restored again (the blade can be in any position), the actuator starts to rotate the damper blade back to the position "OPEN".
- A thermoelectric activation device BAT, which contains two fusible links Tf1 and Tf2, is an integral part of the actuator.
- These fuses are activated when temperature +72°C has been reached (the fuse Tf1 due to temperature outside the duct and the fuse Tf2 due to temperature inside the duct). The thermoelectric activation device can also be equipped with a Tf2 fusible link type ZBAT 95/120/140 (must be specified in the order). In this case, the activation temperature inside the duct is +95°C, +120°C or +140°C (depending on the type).
- After the fusible link Tf1 or Tf2 has been activated, the power supply is permanently and irreversibly interrupted and the actuator, by means of the pre-stretched spring, rotates the damper blade into the breakdown position "CLOSED".
- Signalisation of damper blade position "OPEN" and "CLOSE" is provided by two microswitches.

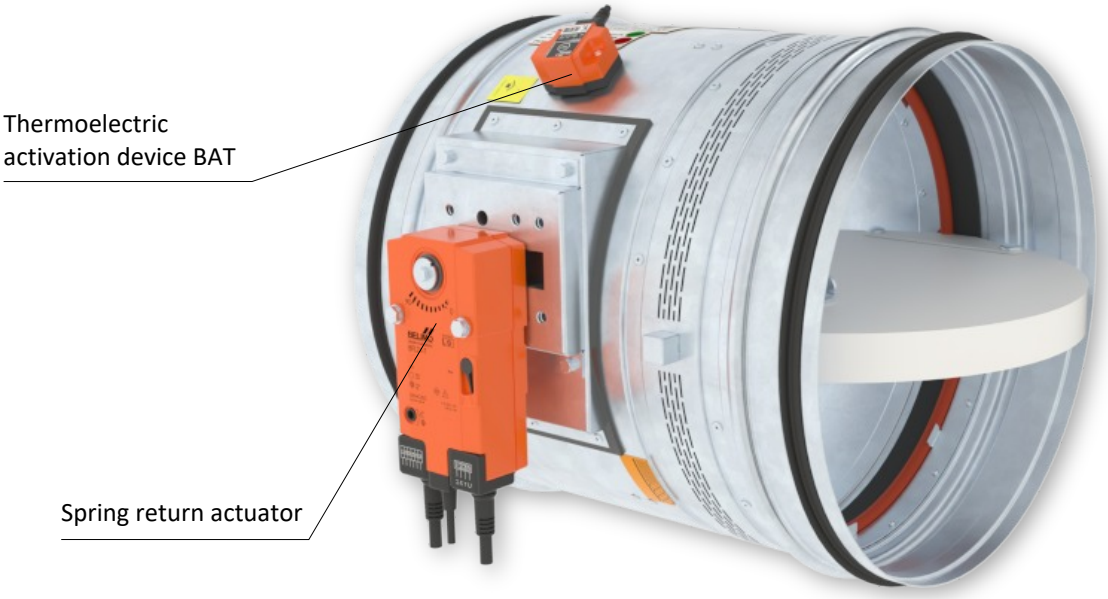

Design .40 and .50

Actuator BELIMO BFL 230-T

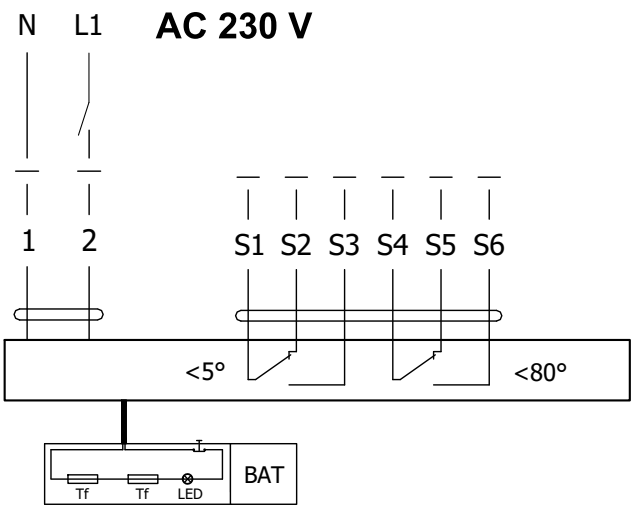

Actuator BELIMO BFL 24-T(-ST)

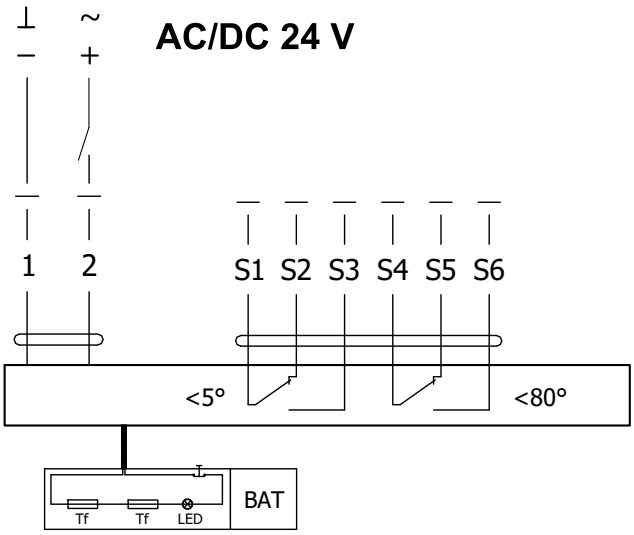

Actuator BELIMO BFL 230-T(-ST), BFL 24-T(-ST)		
Actuator BELIMO - 4 Nm/ 3 Nm Spring	**BFL 230-T(-ST)**	**BFL 24-T(-ST)**
Power voltage	AC 230 V 50/60Hz	AC/DC 24 V 50/60Hz
Power consumption - in operation - in rest position	2,6 W 0,7 W	2,0 W 0,7 W
Dimensioning	4 VA (Imax 4 A @ 5 ms)	2,8 VA (Imax 2,9 A @ 5 ms)
Protection class	II	III
Degree of protection	IP 54	
Running time - motor - spring return	< 60 s ~ 20 s	
Ambient temperature - normal duty - safety duty - non-operating temperature	 -30°C … +55°C The safe position will be attained up to max. +75°C -40°C … +55°C	
Connection - supply/control - auxiliary switch	cable 1 m, 2 x 0,75 mm² (BFL 2xx-T-ST) with 3-pin plug-in connectors cable 1 m, 6 x 0,75 mm² (BFL 2xx-T-ST) with 6-pin plug-in connectors	
Response temperature fusible link	duct outside temperature +72°C duct inside temperature +72°C	

Actuator BELIMO BFN 230-T

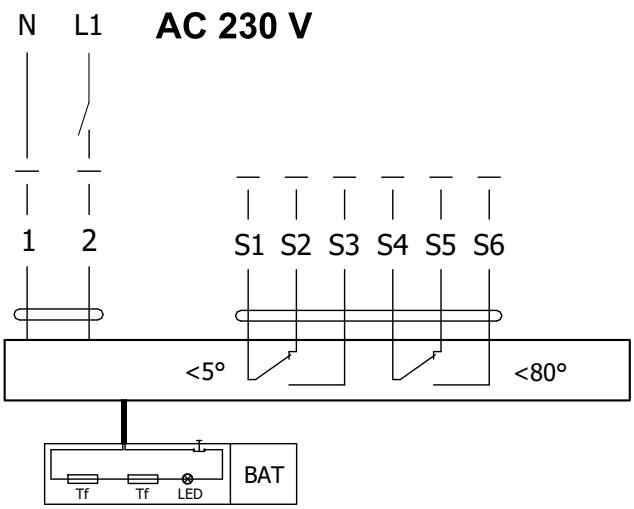

Actuator BELIMO BFN 24-T(-ST)

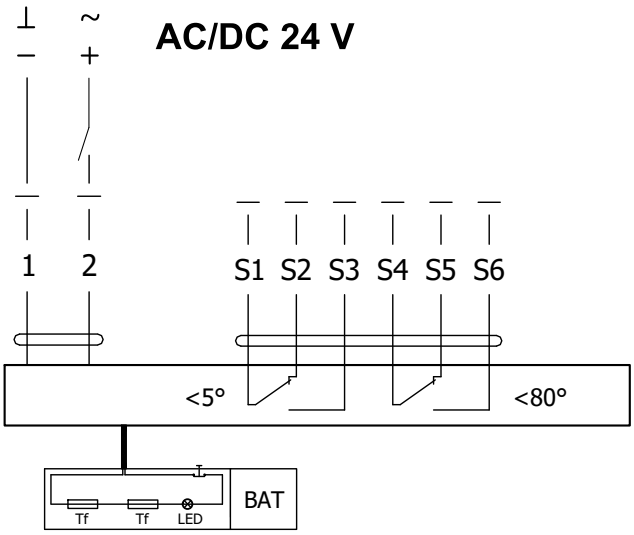

Actuator BELIMO BFN 230-T(-ST), BFN 24-T(-ST)		
Actuator BELIMO - 9 Nm/ 7 Nm Spring	**BFN 230-T(-ST)**	**BFN 24-T(-ST)**
Power voltage	AC 230 V 50/60Hz	AC/DC 24 V 50/60Hz
Power consumption - in operation - in rest position	3,5 W 1,3 W	3,2 W 1,2 W
Dimensioning	6,5 VA (Imax 4 A @ 5 ms)	4,3 VA (Imax 2,9 A @ 5 ms)
Protection class	II	III
Degree of protection	IP 54	
Running time - motor - spring return	< 60 s ~ 20 s	
Ambient temperature - normal duty - safety duty - non-operating temperature	 -30°C … +55°C The safe position will be attained up to max. +75°C -40°C … +55°C	
Connection - supply/control - auxiliary switch	cable 1 m, 2 x 0,75 mm² (BFN 2xx-T-ST) with 3-pin plug-in connectors cable 1 m, 6 x 0,75 mm² (BFN 2xx-T-ST) with 6-pin plug-in connectors	
Response temperature fusible link	duct outside temperature +72°C duct inside temperature +72°C	

Actuator BELIMO BF 230-TN

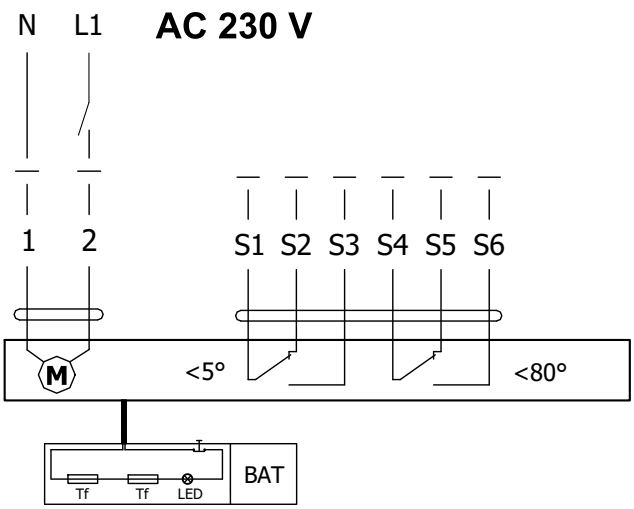

Actuator BELIMO BF 24-TN (-ST)

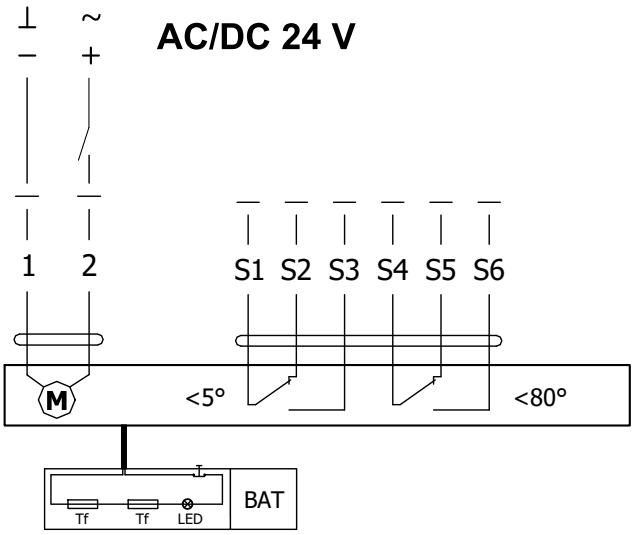

Actuator BELIMO BF 230-TN(-ST), BF 24-TN(-ST)		
Actuator BELIMO - 18 Nm/ 12 Nm Spring	**BF 230-TN(-ST)**	**BF 24-TN(-ST)**
Power voltage	AC 230 V 50/60Hz	AC/DC 24 V 50/60Hz
Power consumption - in operation - in rest position	8,5 W 3 W	7 W 2 W
Dimensioning	11 VA (Imax 8,3 A @ 5 ms)	10 VA (Imax 8,3 A @ 5 ms)
Protection class	II	III
Degree of protection	IP 54	
Running time - motor - spring return	120 s ~ 16 s	
Ambient temperature - normal duty - safety duty - non-operating temperature	 -30°C … +50°C The safe position will be attained up to max. +75°C -40°C … +50°C	
Connection - supply/control - auxiliary switch	cable 1 m, 2 x 0,75 mm² (BF 2xx-TN-ST) with 3-pin plug-in connectors cable 1 m, 6 x 0,75 mm² (BF 2xx-TN-ST) with 6-pin plug-in connectors	
Response temperature fusible link	duct outside temperature +72°C duct inside temperature +72°C	

Thermoelectric activation device BAT

- If the fusible link Tf1 is interrupted (due to temperature outside the duct), it is necessary to replace the spring return actuator. Thermoelectric activation device BAT is integral part of the actuator.
- If the fusible link Tf2 is interrupted (due to temperature inside the duct) , only the spare part ZBAT 72 needs to be replaced.
- When one of the fusible links responds, the supply voltage is interrupted permanently and irreversibly.
- The function (interruption of the supply voltage) can be checked by pressing the test button.
- Installation is carried out with the pre-assembled, self-tapping screws.

BELIMO ZBAT 72
Black (BK) = 72°C (standard)

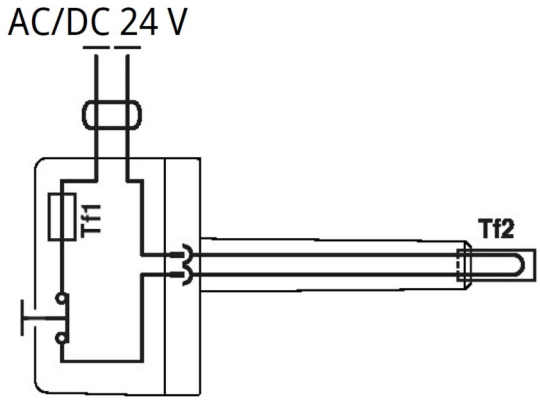

Thermoelectric activation device BAT 72	
Power voltage	AC/DC 24 V 50/60Hz
Rated current	1 A
AC/DC throughput resistance	<1 Ω
Protection class	III
Degree of protection	IP 54
Probe length	65 mm
Ambient temperature Storage temperature Ambient humidity	-30°C … +50°C -40°C … +50°C Max. 95% RH, non-condensing
Connection supply	Cable 1 m, 2 x 0.5 mm², Betaflam cable heatresistant up to 145°C
Response temperature fusible link	Duct inside temperature 72°C Duct outside temperature 72°C

Communication and control module MDCM

- The MDCM damper control module is connected on a bi directional communication loop back to a control panel, typically located at the FCC.
- Each MDCM has a 230v local spur to power the damper actuator.
- Up to 96x MDCM's can be connected on one loop and multiple loops can be incorporated.
- This accessory is only required with MANDIK control systems.
- Max terminal size in MDCM 2.5mm^2

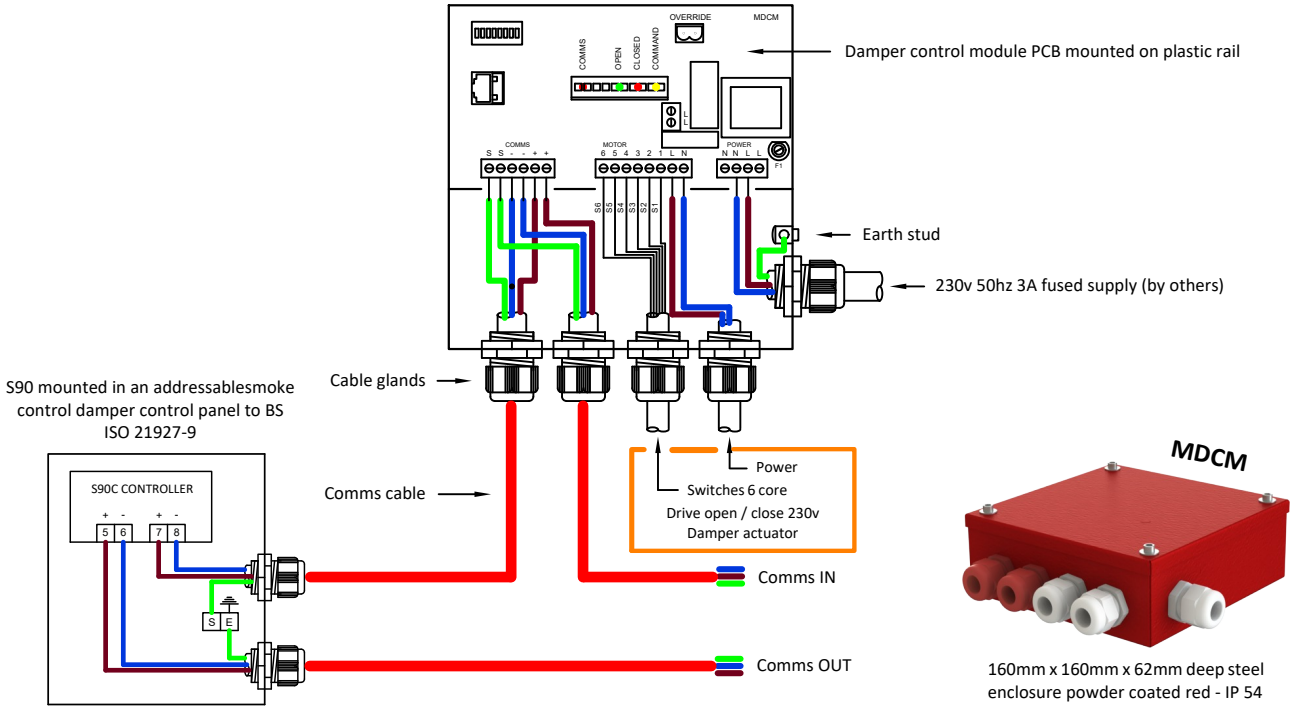

III. DIMENSIONS

SPIRO design with manual control

DN 100 - DN 315

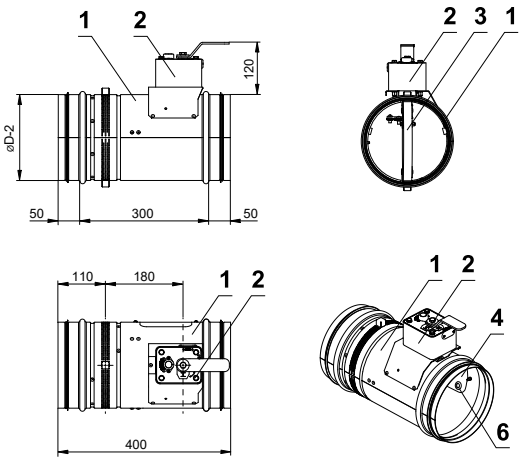

DN 350 - DN 500

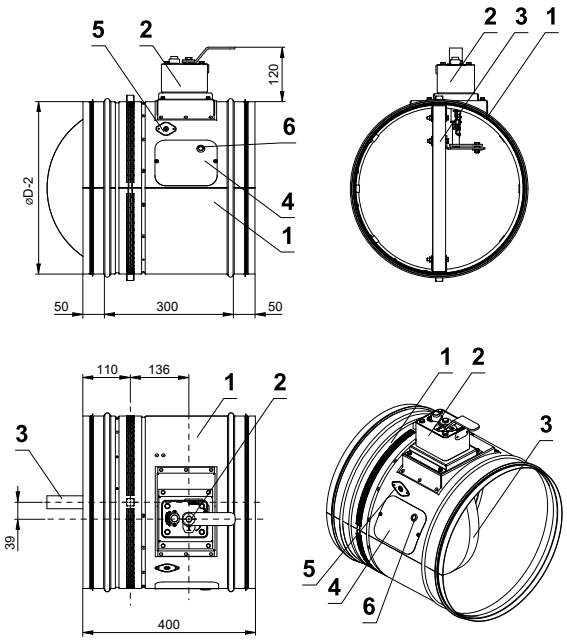

DN 560 - DN 800

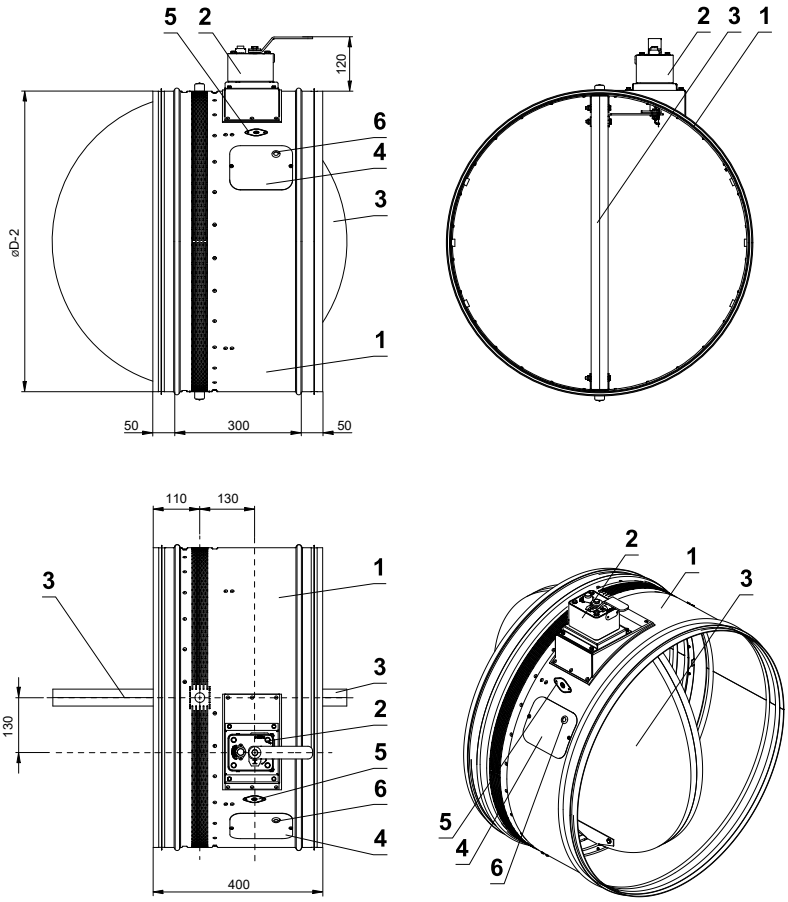

1 Damper casing
2 Manual control
3 Damper blade
4 Inspection opening cover
5 Sensor sticker
6 Hole for camera

FLANGE design with manual control

DN 100 - DN 315

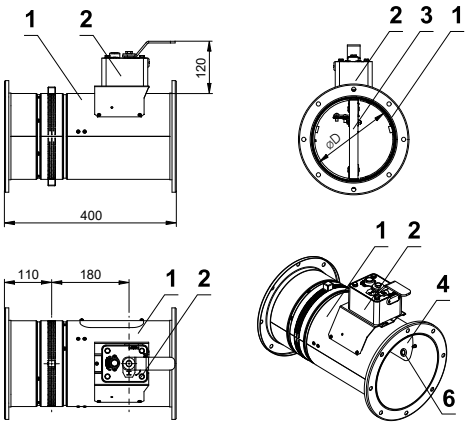

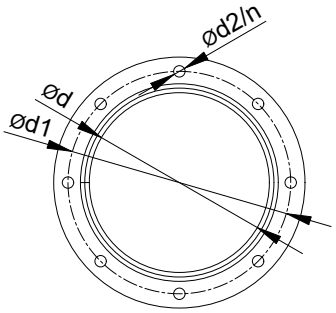

Ød [mm]	Ød1 [mm]	Ød2 [mm]	n number of holes in the flange
100	130	10	4
125	155	10	8
160	195	10	8
180	215	10	8
200	235	10	8
225	260	10	8
250	285	10	8
280	315	10	8
300	335	10	12
315	350	10	12
355	390	10	12
400	445	12	12
450	495	12	12
500	545	12	16
560	605	12	16
600	650	12	16
630	680	12	16
710	760	14	20
800	860	14	20

1 Damper casing
2 Manual control
3 Damper blade
4 Inspection opening cover
5 Sensor sticker
6 Hole for camera

DN 355 - DN 500

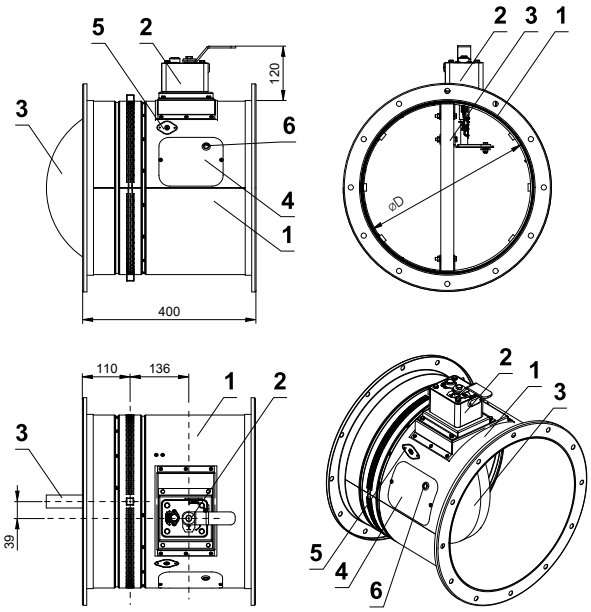

DN 560 - DN 800

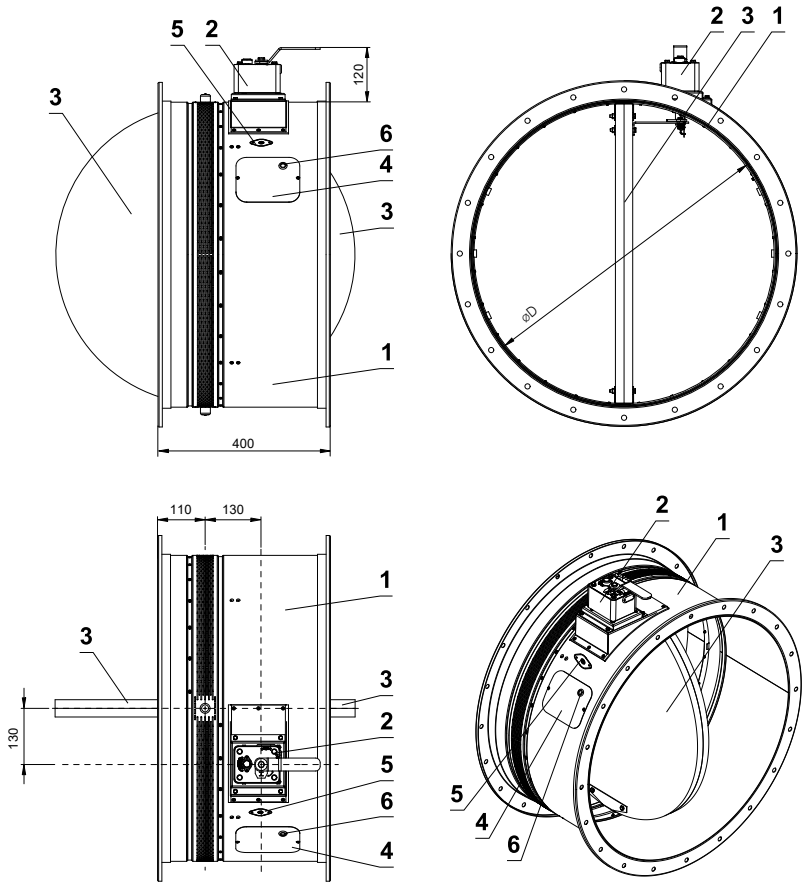

Design SPIRO with spring return actuator

DN 100 - DN 315

The actuator cannot be rotated

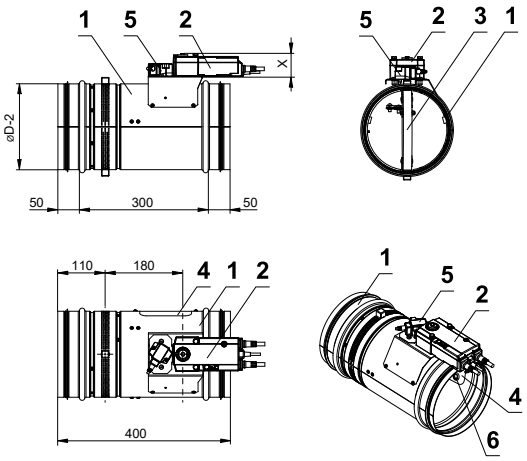

DN 350 - DN 500

The actuator can be rotated 90°

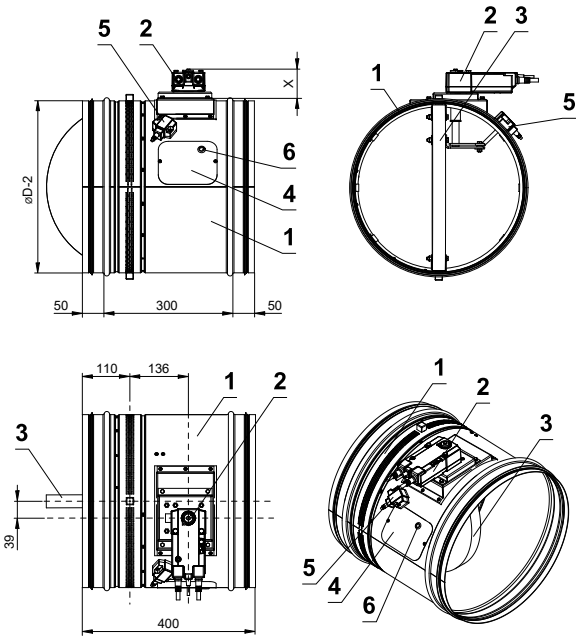

DN 560 - DN 800

The actuator can be rotated 90°

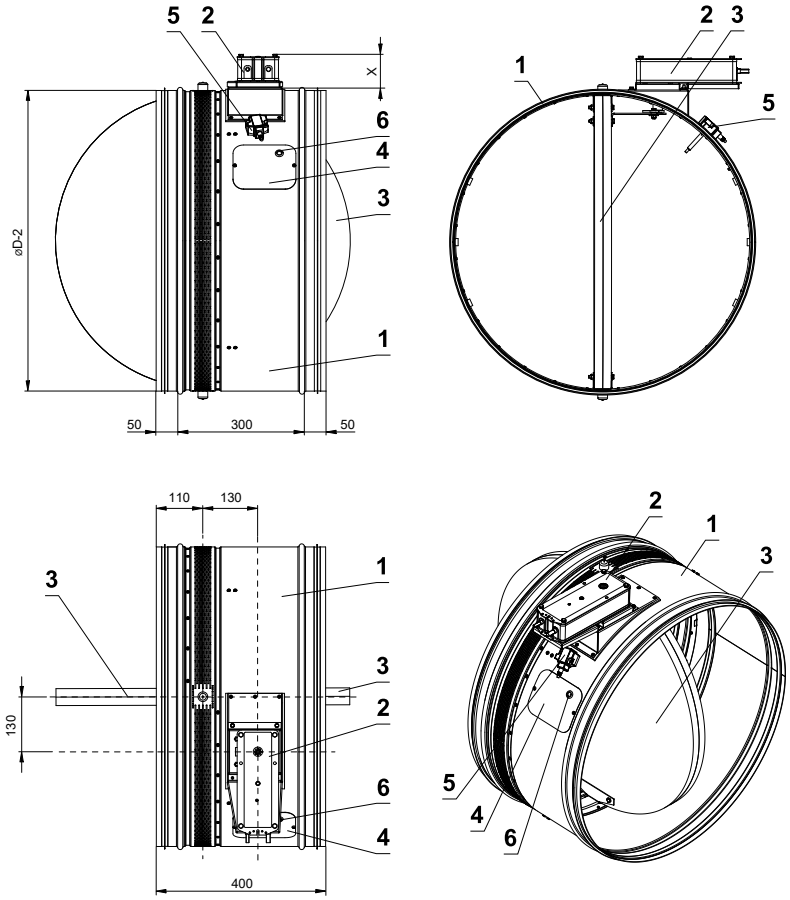

X=53 mm (BFL) *
X=72 mm (BFN) *
X=78 mm (BF) *

1 Damper casing
2 Spring return actuator
3 Damper blade
4 Inspection opening cover
5 Thermoelectric activation device BAT
6 Hole for camera

- Assigment of actuators to individual sizes → see page 17

Design FLANGE with spring return actuator

DN 100 - DN 315

The actuator cannot be rotated

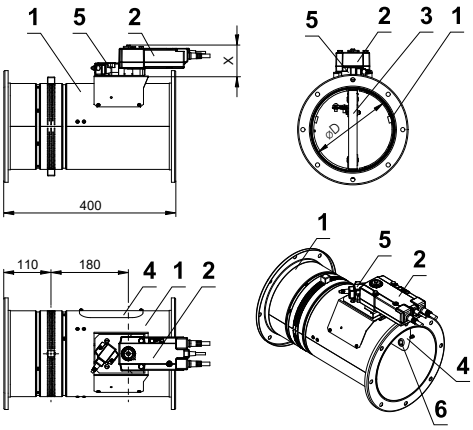

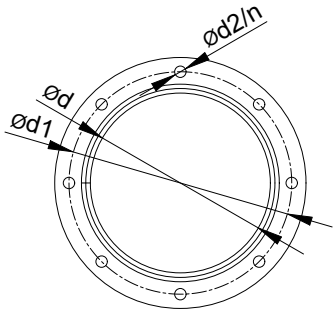

Ød [mm]	Ød1 [mm]	Ød2 [mm]	n number of holes in the flange
100	130	10	4
125	155	10	8
160	195	10	8
180	215	10	8
200	235	10	8
225	260	10	8
250	285	10	8
280	315	10	8
300	335	10	12
315	350	10	12
355	390	10	12
400	445	12	12
450	495	12	12
500	545	12	16
560	605	12	16
600	650	12	16
630	680	12	16
710	760	14	20
800	860	14	20

X=70 mm (BFL - DN 100 ÷ DN 315) *
X=53 mm (BFL - DN 355 ÷ DN 400) *
X=72 mm (BFN) *
X=78 mm (BF) *

1 Damper casing
2 Spring return actuator
3 Damper blade
4 Inspection opening cover
5 Thermoelectric activation device BAT
6 Hole for camera

DN 355 - DN 500

The actuator cannot be rotated

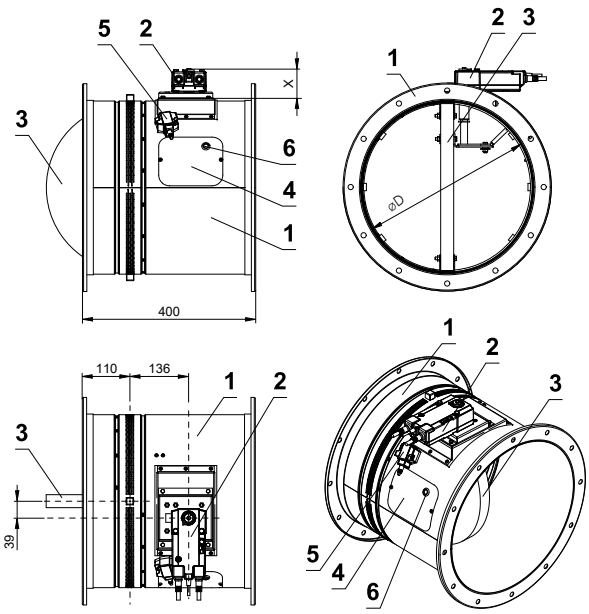

DN 560 - DN 800

The actuator cannot be rotated

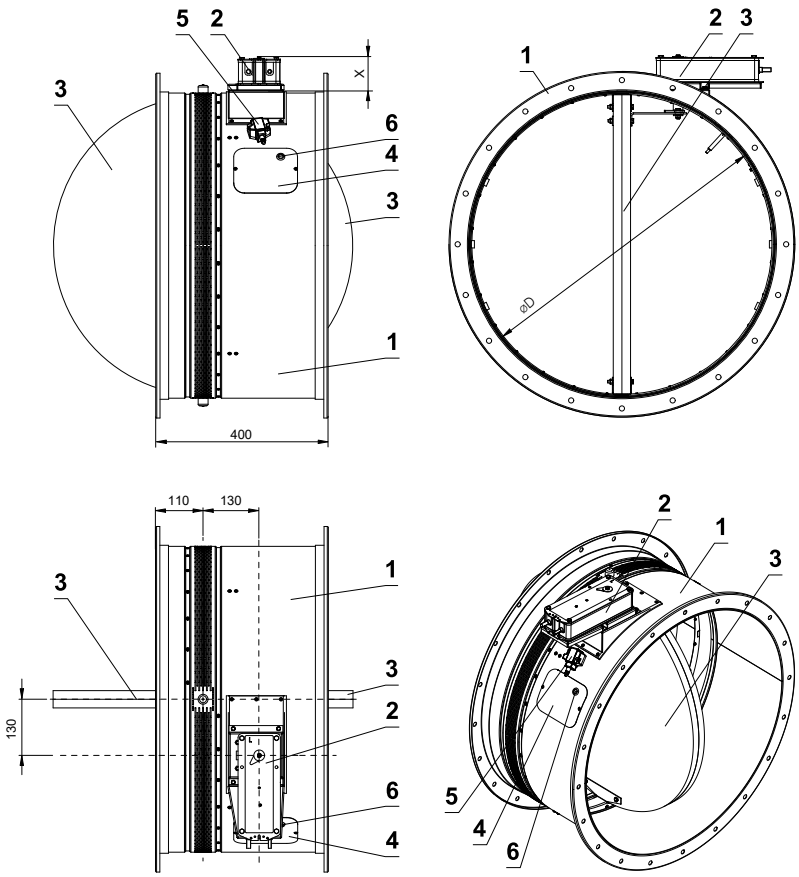

■ Assigment of actuators to individual sizes → see page 17

Damper blade overlaps

- Open damper blade overlaps the damper casing by the value “a” or “c”. These values are specified in chapter Technical parameters → see page 17
- Dimensions of damper connecting flanges are in accordance with BS EN 12 0505.

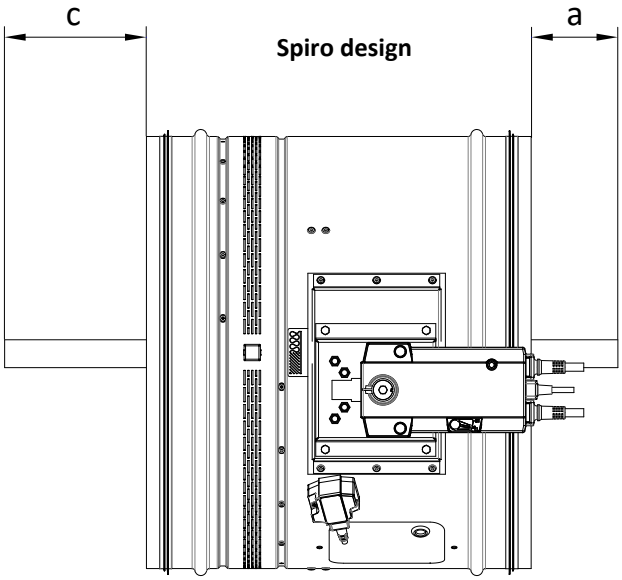

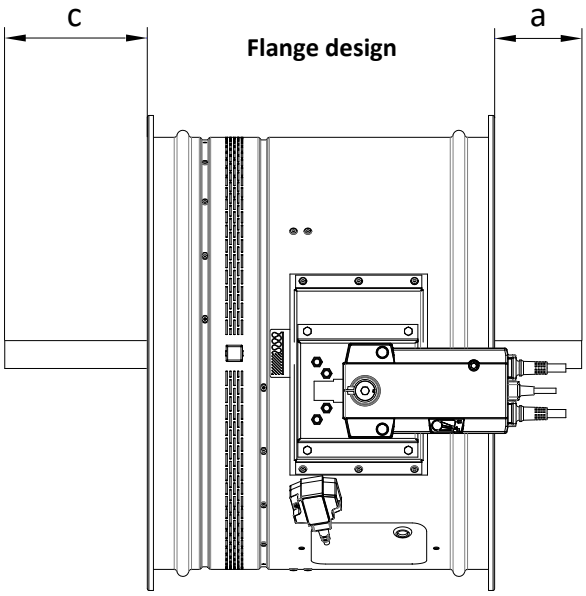

Values "a" and "c" has to be respected when projecting following air-conditioning duct.

Fire damper with installation brackets

- Weight of the installation bracket is 0,04 kg.
- Number of installation brackets for individual sizes → see page 17

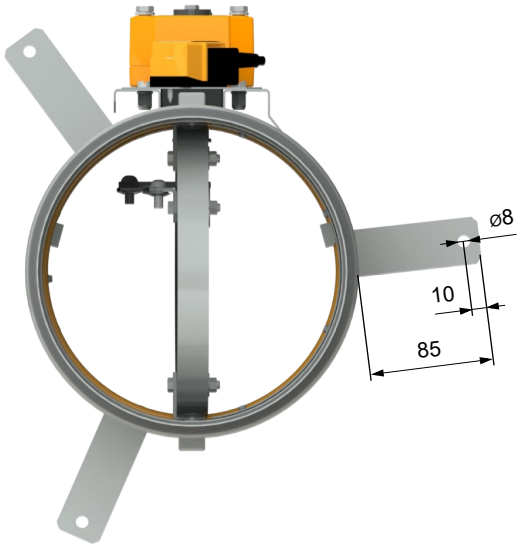

Technical parameters

Nominal size ØD [mm]	Damper blade overlaps		Weight		Number of installation brackets *	Free area S_f [m²]	Blade thickness [mm]	Spring return actuator	Manual control
	a [mm]	c [mm]	Man. control [kg]	Spring return actuator [kg]					
100	-	-	3,1	3,2	2	0,0031	20	BFL	M1
125	-	-	3,4	3,5	2	0,0062	20	BFL	M1
140	-	-	3,6	3,7	2	0,0085	20	BFL	M1
150	-	-	3,7	3,8	2	0,0103	20	BFL	M1
160	-	-	3,9	4	2	0,0123	20	BFL	M1
180	-	-	4,2	4,3	3	0,0166	20	BFL	M1
200	-	-	4,5	4,6	3	0,0215	20	BFL	M1
225	-	-	5,1	5,2	3	0,0275	25	BFL	M1
250	-	9	5,6	5,7	3	0,0354	25	BFL	M2
280	-	24	6,2	6,3	3	0,0462	25	BFL	M2
300	-	34	6,7	6,8	3	0,0542	25	BFL	M2
315	-	42	6,9	7,1	3	0,0606	25	BFL	M2
350**	-	59	9,1	9,2	3	0,0751	30	BFL	M2
355	-	62	9	9,1	3	0,0776	30	BFL	M2
400	-	84	10,1	10,2	3	0,1015	30	BFL	M2
450	-	109	11,4	11,8	3	0,1318	30	BFN	M3
500	-	134	13,1	13,5	3	0,1661	30	BFN	M3
560	-	164	15	15,4	3	0,2123	30	BFN	M3
600	4	184	16,4	18,7	3	0,2463	30	BF	M4
630	19	199	17,2	19,4	3	0,2735	30	BF	M4
710	59	239	29,5	31,7	4	0,3446	40	BF	M4
800	104	284	34,8	37,1	4	0,4448	40	BF	M5

** Weight of installation brackets is 0,04 kg.*
*** Only spiro design can be ordered → see page 37*

IV. INSTALLATION

Placement and installation

- The fire dampers are suitable for installation in arbitrary position in vertical and horizontal passages of fire separating constructions. The damper installation procedures must be done so that all load transfer from the fire separating constructions to the damper is absolutely excluded. Following air-conditioning duct must be suspended or supported so that all load transfer from the following duct to the fire damper is absolutely excluded. The gap between the installed damper and the fire separating construction must be perfectly filled with approved material.
- The damper must be installed so that the damper blade (in closed position) is situated in the fire separating construction - marked by the label BUILT-IN EDGE on the damper casing. If such solution is not possible, the duct between the fire separating construction and the damper blade must be protected according to the certified installation method → see pages 21 to 25
- During the installation and plastering process, the actuating mechanism must be protected (covered) against damage and pollution. The damper casing should not be deformed during bricking in. Once the damper is built in, the damper blade should not grind against the damper casing during opening or closing.
- The distance between the fire damper and the construction (wall, ceiling) must be 75 mm at the minimum, according to BS EN 1366-2. If two or more dampers are to be installed in one fire separating construction, the distance between adjacent dampers must be 200 mm at the minimum, according to BS EN 1366-2.

Minimum distance between the fire dampers and the construction

- minimum distance 200 mm between dampers, according to BS EN 1366-2
- minimum distance 75 mm between damper and construction (wall/ceiling), according to BS EN 1366-2
- recommended minimum distance 150 mm necessary for access to the actuator
- recommended minimum distance 250 mm necessary for access to the manual control

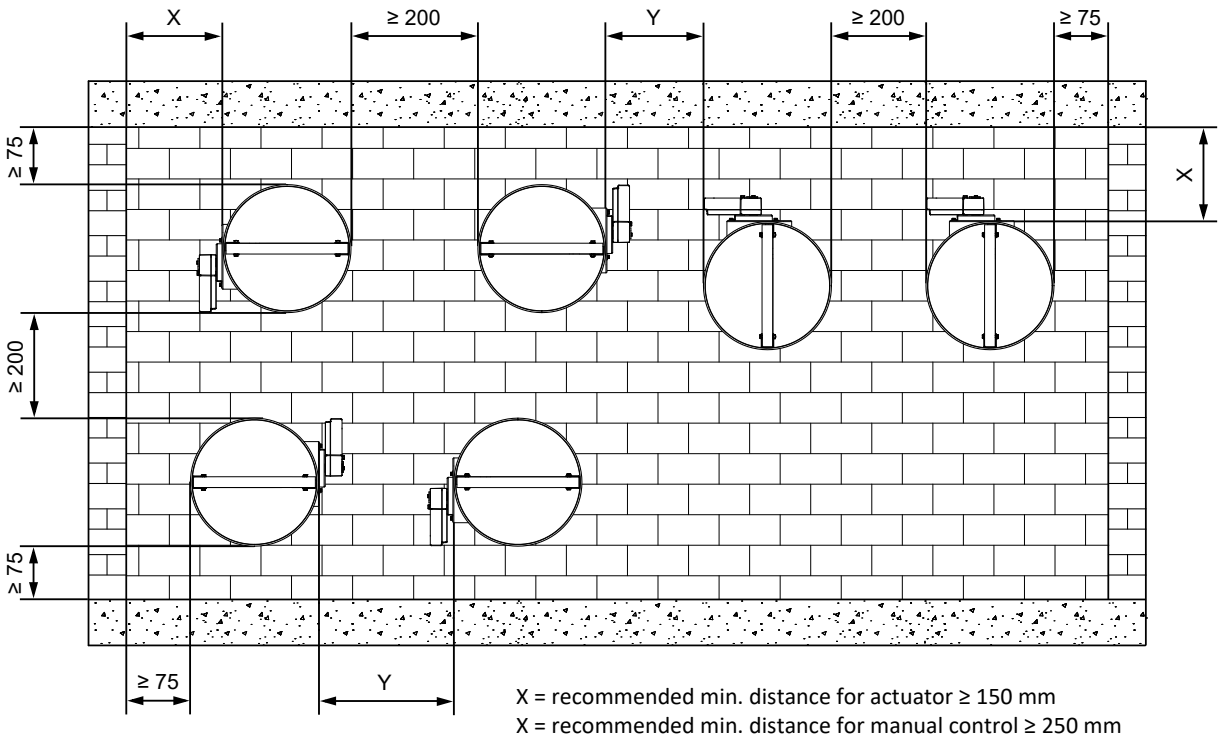

X = recommended min. distance for actuator ≥ 150 mm
X = recommended min. distance for manual control ≥ 250 mm

Y = min. distance for actuator ≥ 200 mm acc. to BS EN 1366-2
Y = recommended min. distance for manual control ≥ 250 mm

- Always consult the wall manufacturers specific guidelines for deflection heads, penetration size, location to other services, fire stopping and load bearing capacity.
- No other services should pass through the dampers building work opening.
- For lightweight walls always consult the wall manufacturer specific guidelines for penetrations sizes and distances.

Built in edge

Spiro design

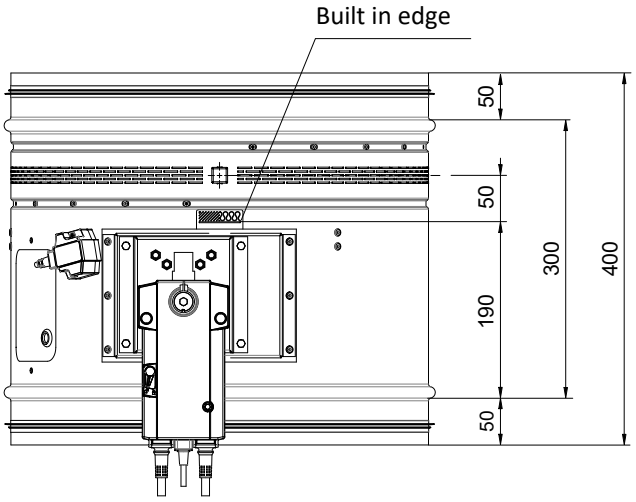

Flange design

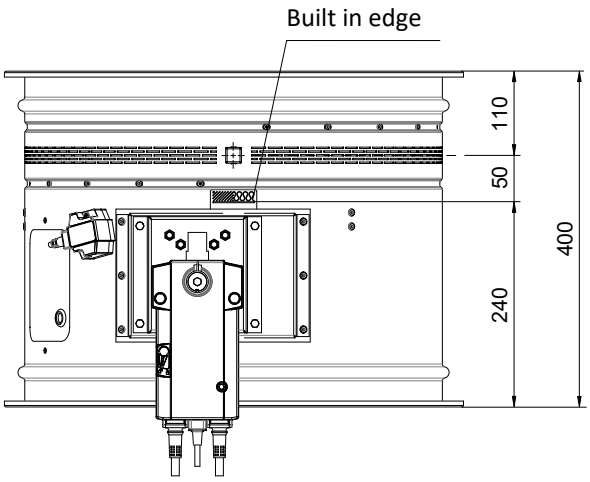

Dimensions of an installation opening

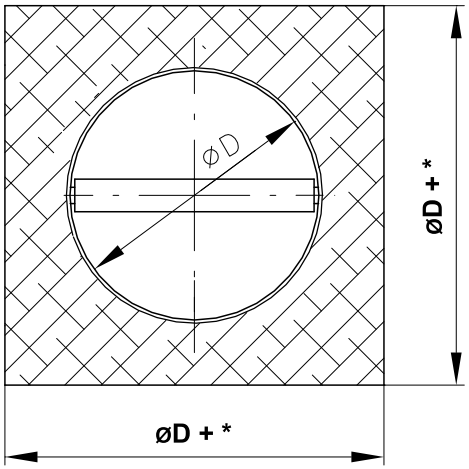

* **Mortar or gypsum**

- øD+100$^{+20/-0}$ for max. fire resistance of the installation **EI 120 S**
- min. øD+100 for max. fire resistance of the installation **EI 90 S**
- max. øD+300 for max. fire resistance of the installation **EI 90 S**

* **Ablative Coated Batt**

- min. øD+80
- max. øD+260

Dimensions of an installation opening

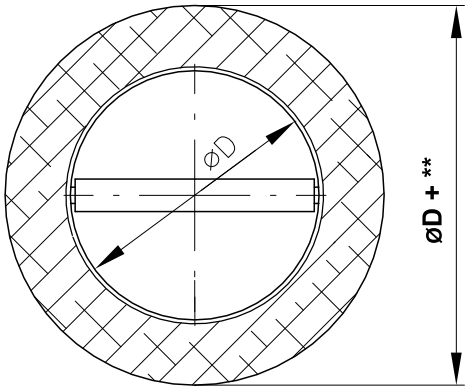

** **Mortar or gypsum**

- øD+100$^{+20/-0}$ for max. fire resistance of the installation **EI 120 S**
- min. øD+100 for max. fire resistance of the installation **EI 90 S**
- max. øD+300 for max. fire resistance of the installation **EI 90 S**

Statement of installations

Installation	wall/ceiling min. thickness [mm]	Method of installation	Fire resistance	Page
In solid wall construction	100	Mortar or gypsum	EI 90 (v_e i↔o) S EI 120 (v_e i↔o) S	21
		Ablative Coated Batt	EI 90 (v_e i↔o) S	22
In gypsum wall construction	100	Mortar or gypsum	EI 90 (v_e i↔o) S EI 120 (v_e i↔o) S	23
		Ablative Coated Batt	EI 90 (v_e i↔o) S	24
In solid ceiling construction	150	Mortar or gypsum	EI 90 (h_o i↔o) S EI 120 (h_o i↔o) S	25

Installation in solid wall construction

In solid wall construction - mortar or gypsum

EI 90 (v_e i↔o) S
EI 120 (v_e i↔o) S*

- For connection following duct → see page 28
- This installation was tested without supports. Supports are optional, if are used, follow the manufacturer's instructions and national standards.

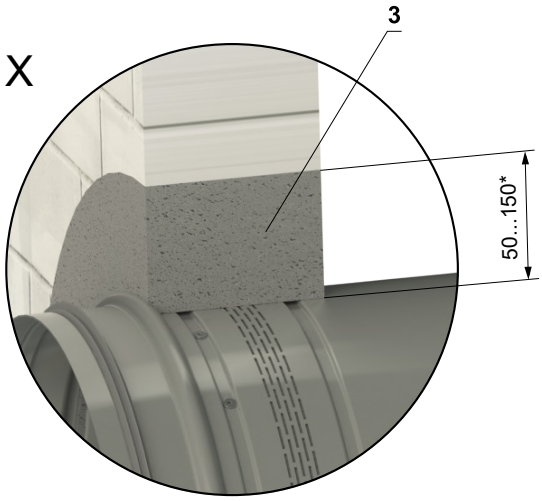

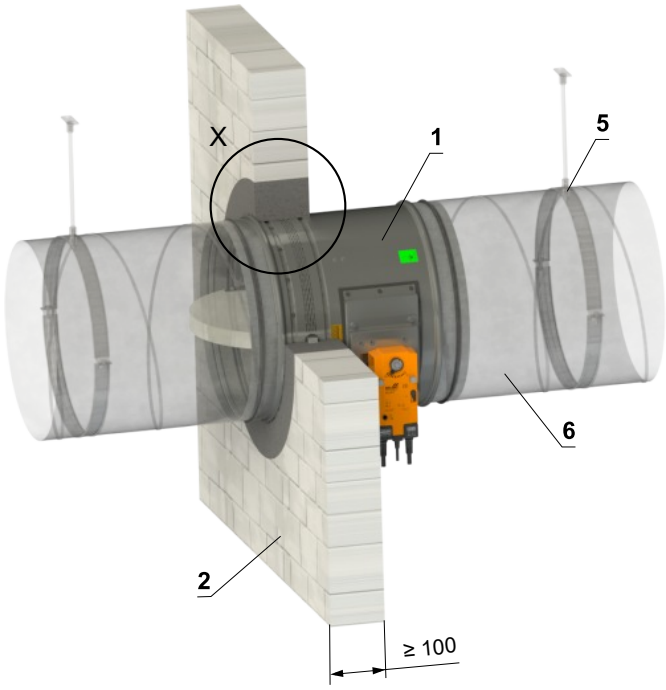

* In the case of fire resistance EI 120, the installation gap is limited to 50 mm $^{+10/-0}$.
For fire resistance EI 90 or lower, an installation gap range of 50–150 mm is permitted.

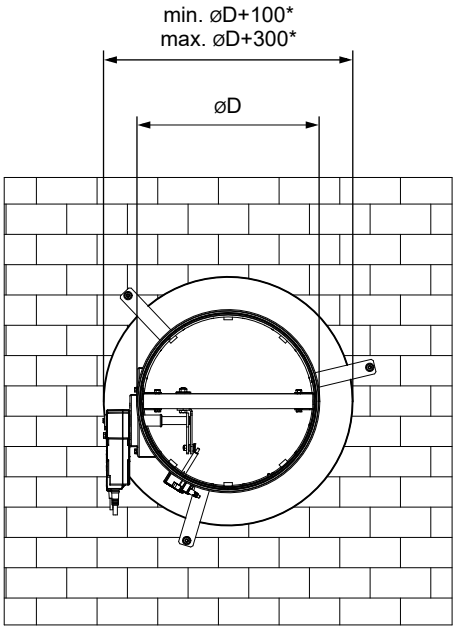

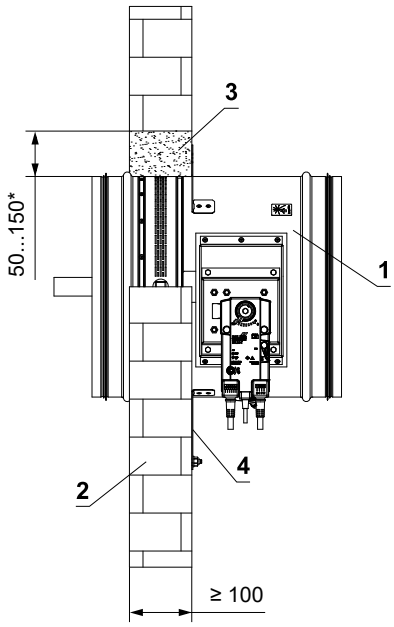

1 FDMR
2 Solid wall construction
3 British gypsum thistle bond 60 (or equivalent can by used) minimum density 670 kg/m³
4 Damper bracket → see page 27
5 Circular suspension with threaded rod → see pages 26 to 28
6 Duct

In solid wall construction - Ablative Coated Batt

EI 90 (v_e i↔o) S

- For connection following duct → see page 28

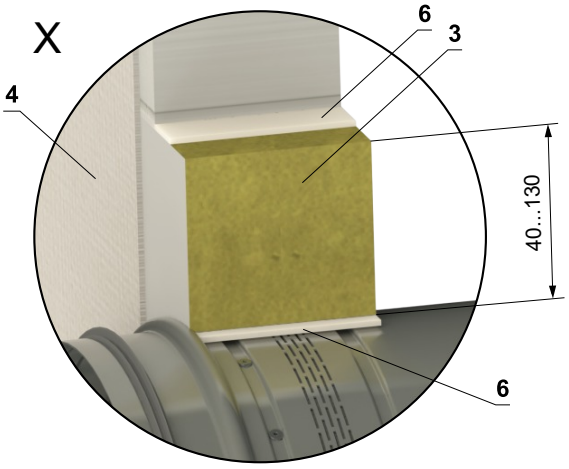

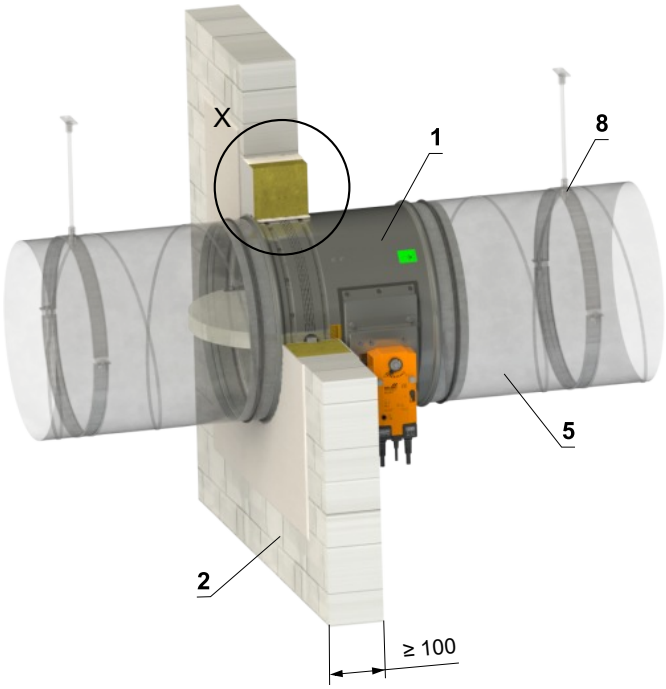

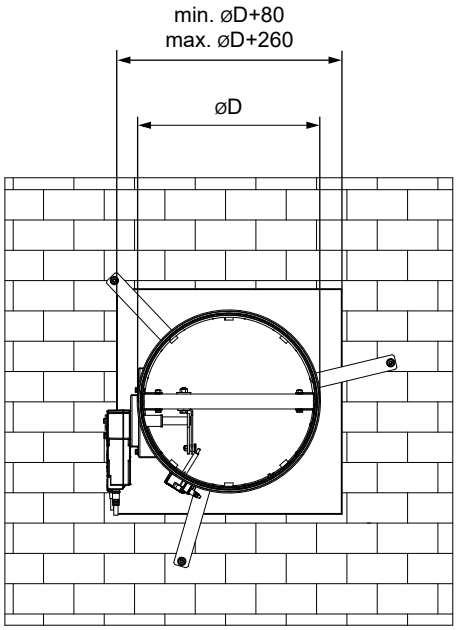

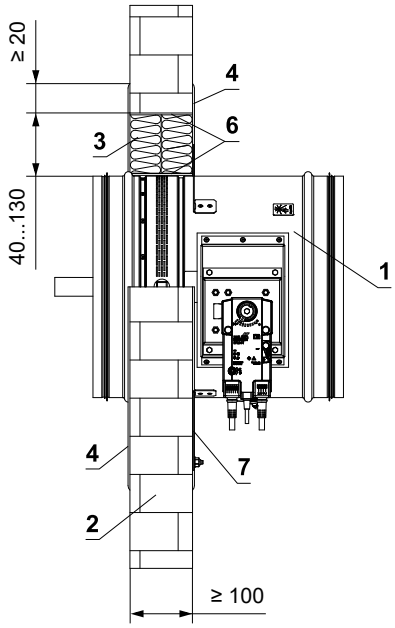

1 FDMR
2 Solid wall construction
3 Ablative Coated Batt (e.g. Firestop Board HILTI CFS-CT B 1S 140/50 - min. density 140 kg/m^3 + Firestop acrylic sealant HILTI CFS-S ACR or equivalent)
4 Fire stop coating thickness 1 mm (e.g. HILTI CFS-CT, PROMASTOP-CC or equivalent)
5 Duct
6 Fire resistant mastic - fill the gap on both sides of the fire separation construction and around the perimeter of penetration and damper body. (e.g. HILTI CFS-S ACR)
7 Damper bracket → see page 27
8 Circular suspension with threaded rod → see pages 26 to 28

Installation in gypsum wall construction

In gypsum wall construction - mortar or gypsum

EI 90 (v_e i↔o) S
EI 120 (v_e i↔o) S*

- For connection following duct → see page 28
- The installation opening is lined with a UW/CW profile.
- This installation was tested without supports. Supports are optional, if are used, follow the manufacturer's instructions and national standards.

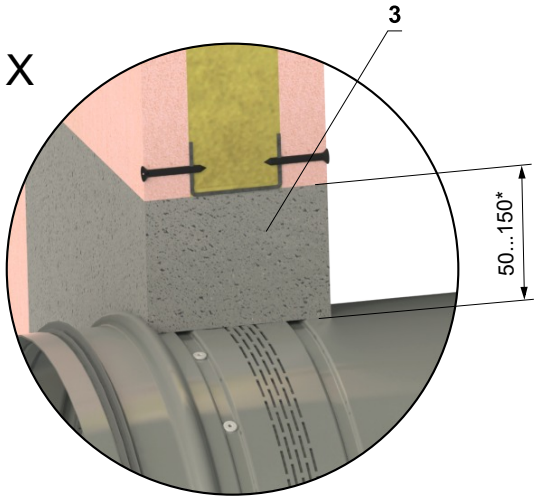

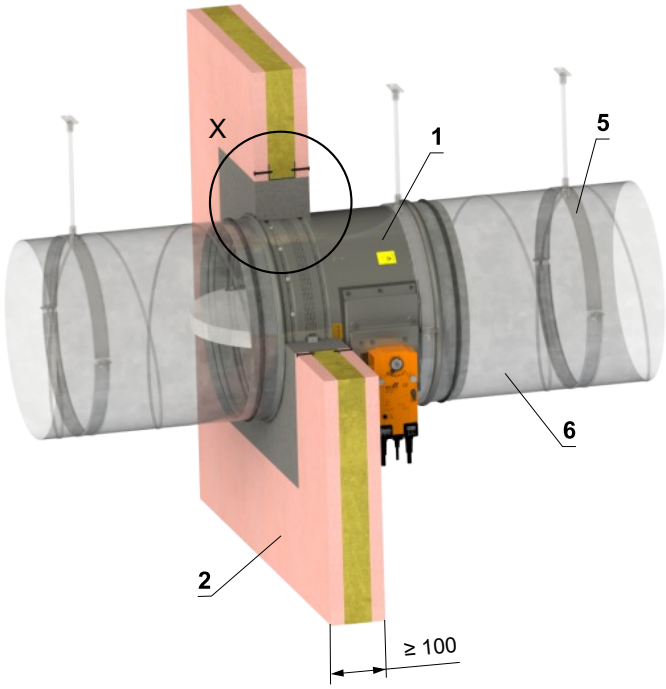

* In the case of fire resistance EI 120, the installation gap is limited to 50 mm $^{+10/-0}$.
For fire resistance EI 90 or lower, an installation gap range of 50–150 mm is permitted.

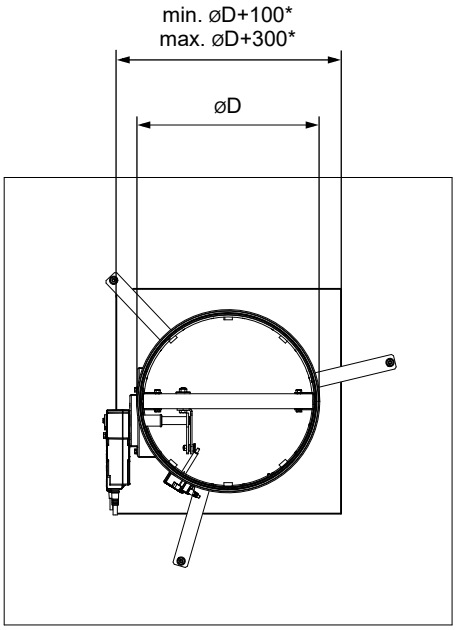

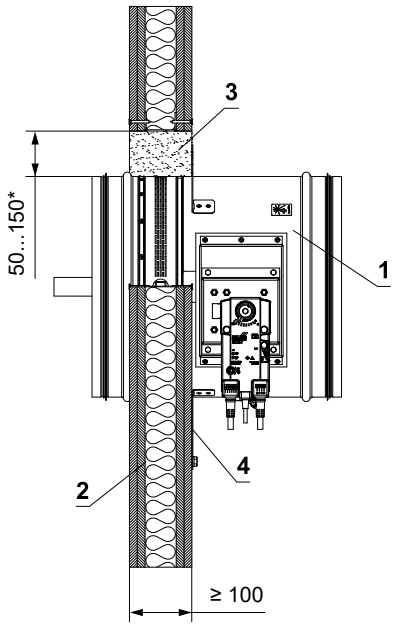

1 FDMR
2 Gypsum wall construction
3 British gypsum thistle bond 60 (or equivalent can by used) minimum density 670 kg/m³
4 Damper bracket → see page 27
5 Circular suspension with threaded rod → see pages 26 to 28
6 Duct

In gypsum wall construction - Ablative Coated Batt

EI 90 (v_e i↔o) S

- For connection following duct → see page 28
- The installation opening is lined with a UW/CW profile.

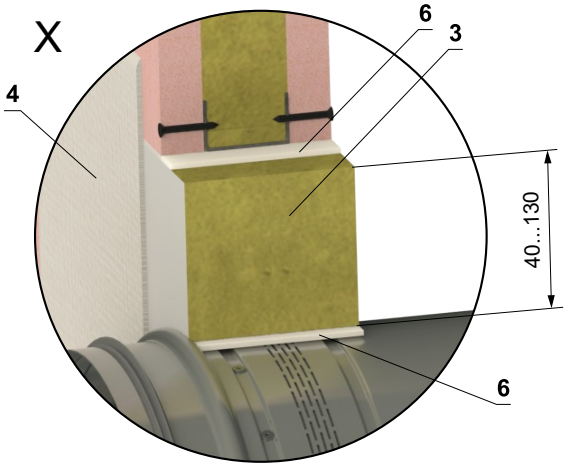

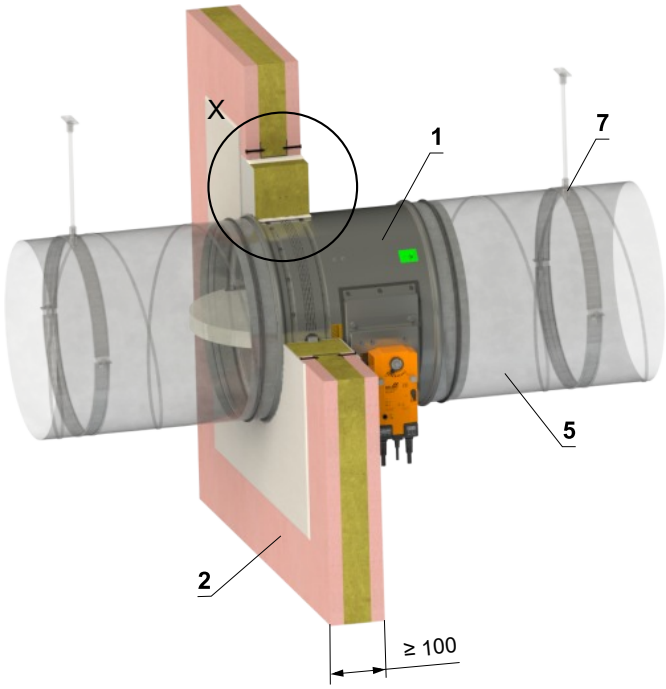

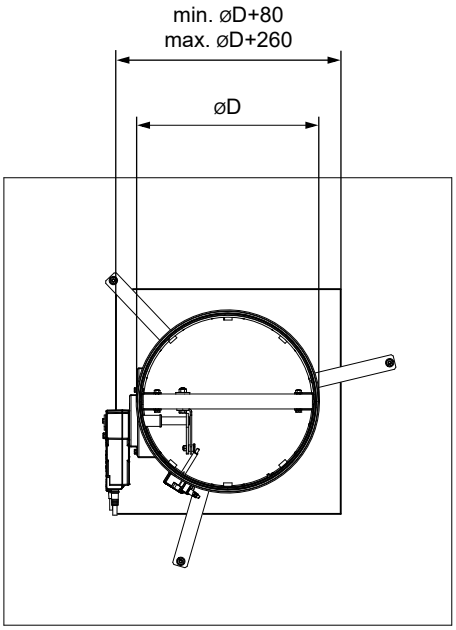

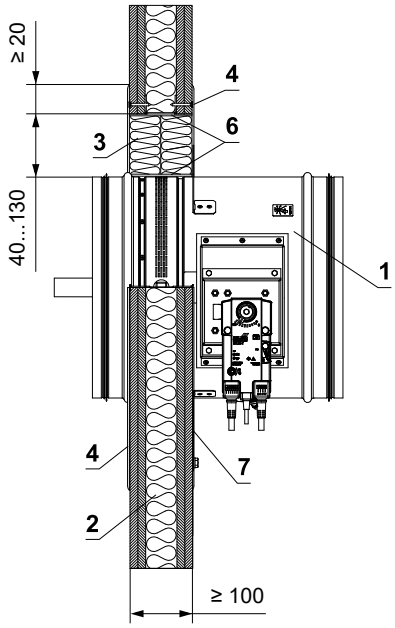

1 FDMR
2 Gypsum wall construction
3 Ablative Coated Batt (e.g. Firestop Board HILTI CFS-CT B 1S 140/50 - min. density 140 kg/m^3 + Firestop acrylic sealant HILTI CFS-S ACR or equivalent)
4 Fire stop coating thickness 1 mm (e.g. HILTI CFS-CT, PROMASTOP-CC or equivalent)
5 Duct
6 Fire resistant mastic - fill the gap on both sides of the fire separation construction and around the perimeter of penetration and damper body. (e.g. HILTI CFS-S ACR)
7 Damper bracket → see page 27
8 Circular suspension with threaded rod → see pages 26 to 28

Installation in solid ceiling construction

In solid ceiling construction - mortar or gypsum

EI 90 (h_o i↔o) S
EI 120 (h_o i↔o) S*

- For connection following duct → see page 28
- This installation was tested without supports. Supports are optional, if are used, follow the manufacturer's instructions and national standards.
- The damper can be installed from both sides of the construction, i.e. from the top or the bottom side of the ceiling.

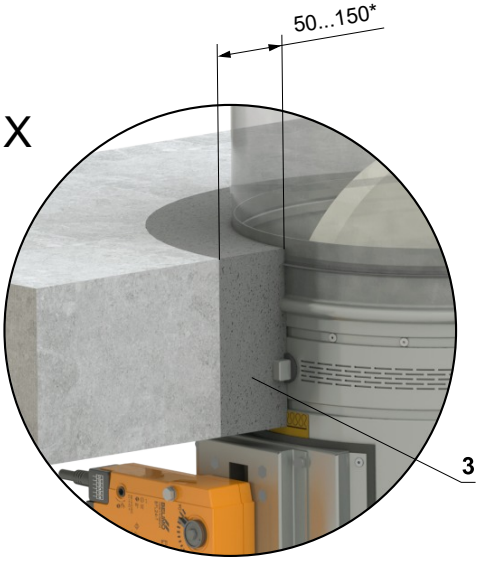

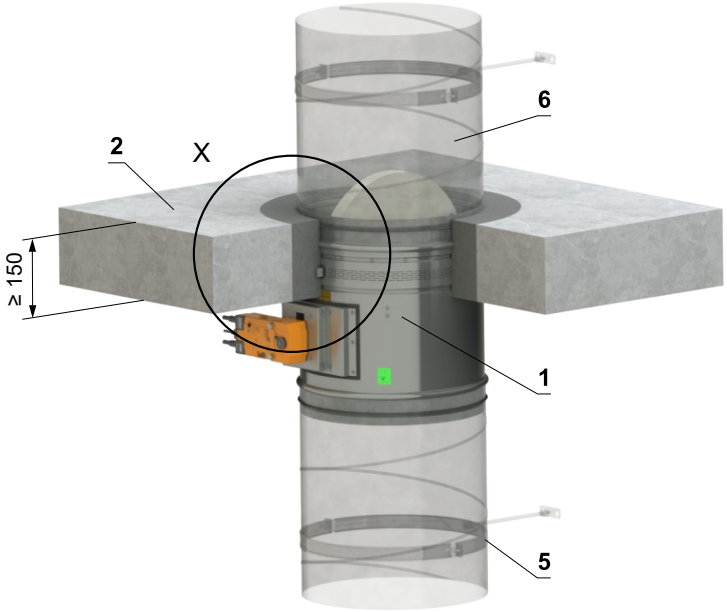

* In the case of fire resistance EI 120, the installation gap is limited to 50 mm $^{+10/-0}$.
For fire resistance EI 90 or lower, an installation gap range of 50–150 mm is permitted.

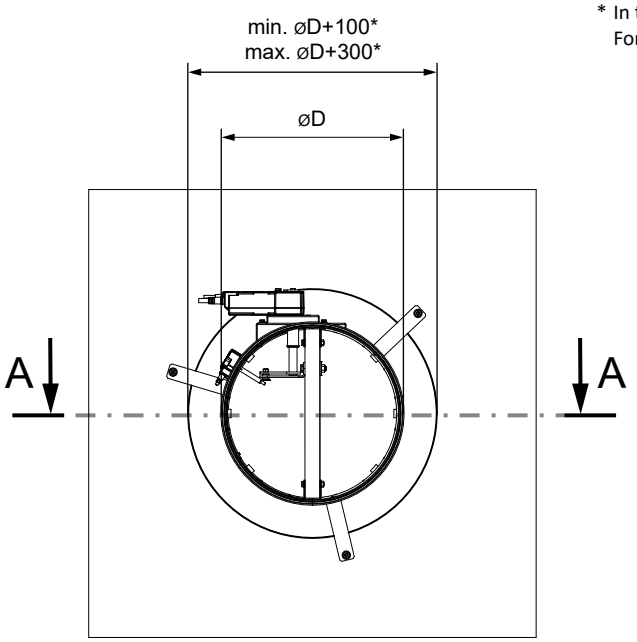

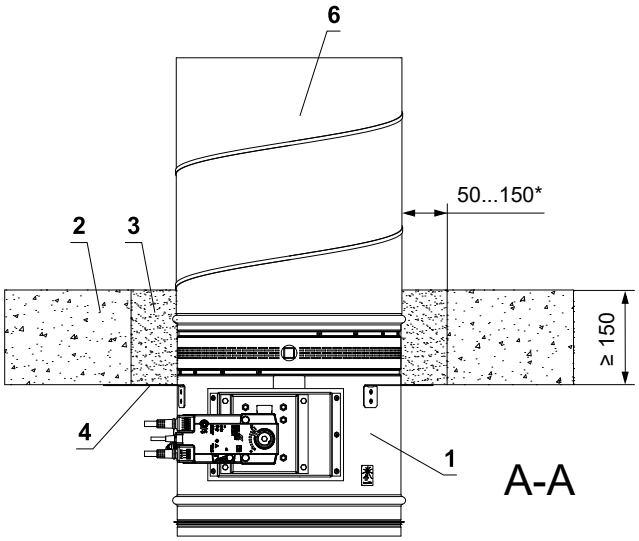

1 FDMR
2 Solid ceiling construction
3 British gypsum thistle bond 60 (or equivalent can by used) minimum density 670 kg/m³
4 Damper bracket → see page 27
5 Circular suspension with threaded rod → see pages 26 to 28
6 Duct

V. SUSPENSION SYSTEMS

Mounting to the ceiling wall

- The dampers must be suspended using threaded rods and mounting profiles. Their dimensioning depend on the weight of the damper.
- The dampers and the duct must be suspended separately.
- Following air-conditioning duct must be suspended or supported so that all load transfer from the following duct to the damper flanges is absolutely excluded. Adjacent duct must be suspended or supported, as required by the duct suppliers.

Examples of anchoring to the ceiling construction
Follow the instructions of fixing specialist or installation company

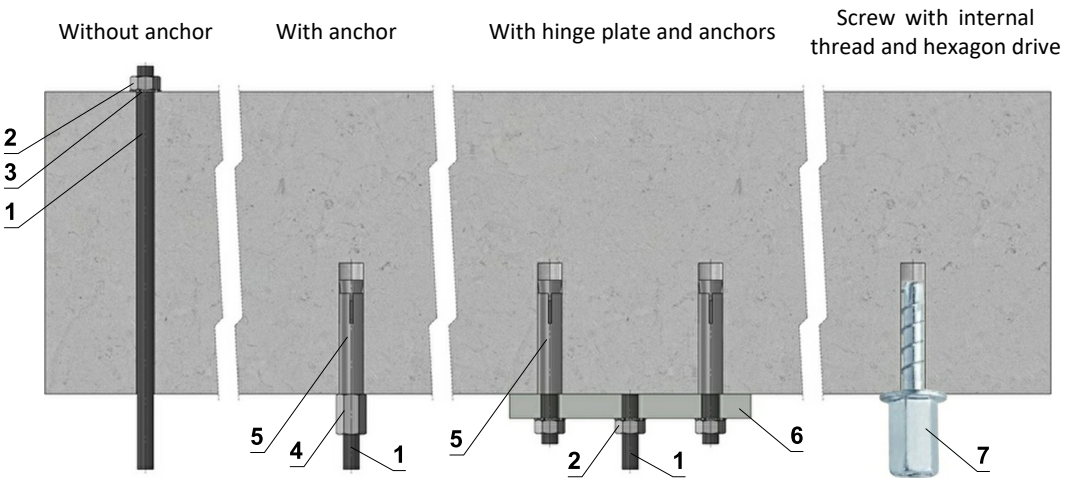

Hinge plates

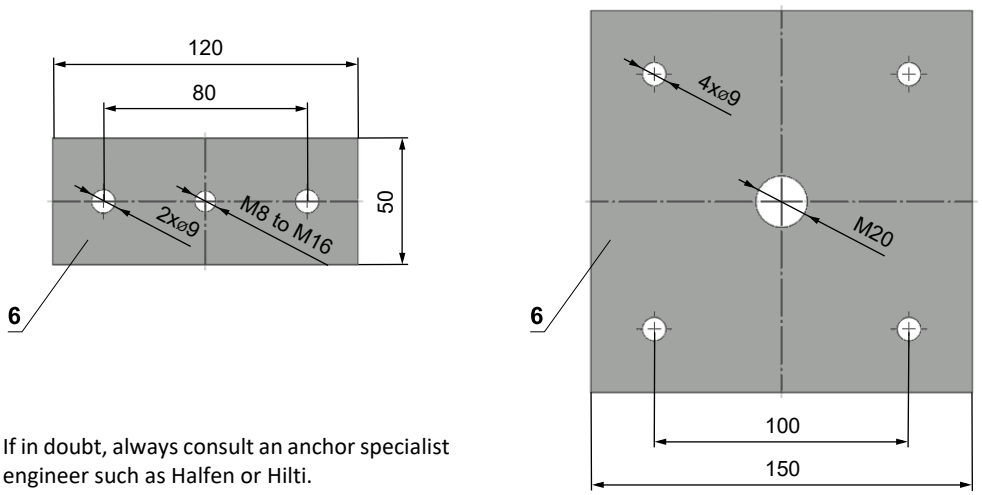

- If in doubt, always consult an anchor specialist engineer such as Halfen or Hilti.

1 Threaded rod M8 - M20
2 Nut M8 - M20
3 Washer for M8 - M20
4 Coupling Nut M8 - M20
5 Anchor
6 Hinge plate - min. thickness 10 mm
7 Concrete screw tested for fire resistance R30-R90, max. Tension up to 0.75 KN (length 35 mm)

Load capacities of threaded rods at the required fire resistance 60 min. < t ≤ 120 min.

Size	As [mm²]	Weight [kg]	
		for 1 rod	for 2 rods
M8	36,6	22	44
M10	58	35	70
M12	84,3	52	104
M16	157	96	192
M18	192	117	234
M20	245	150	300

Example of fixing FDMR to the wall or ceiling

In solid wall construction

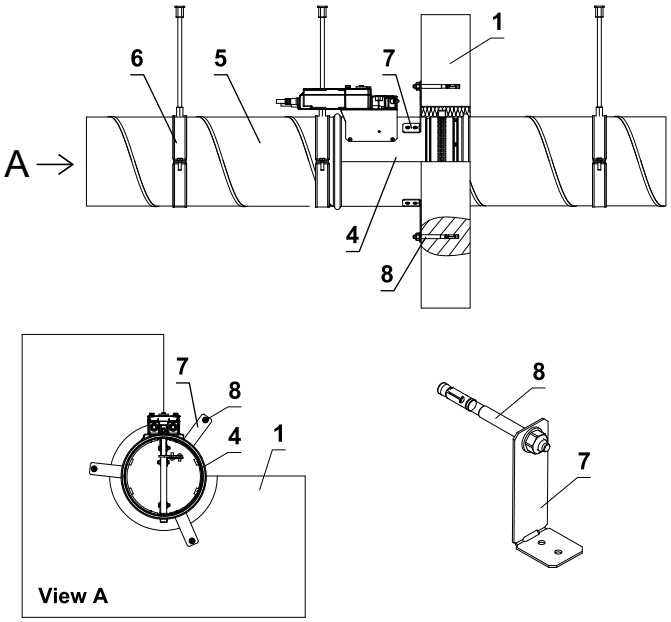

In solid ceiling construcion

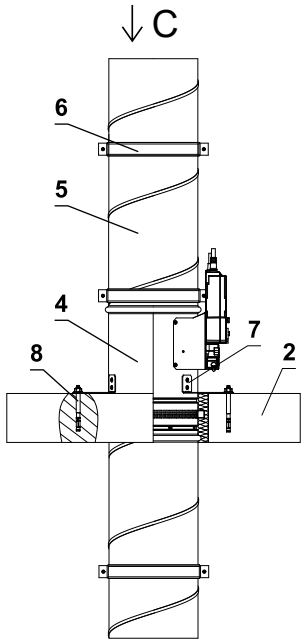

In gypsum wall construction

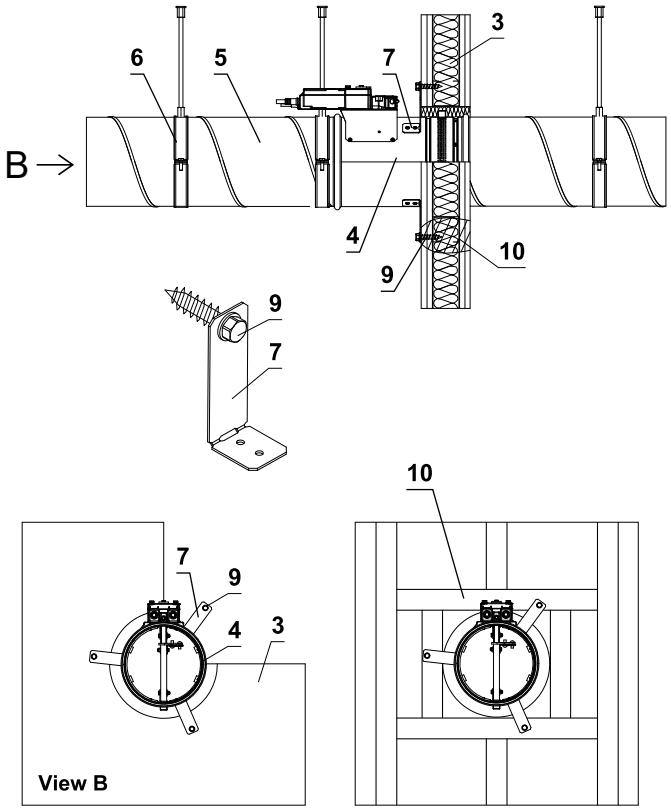

Grid from "U" profile

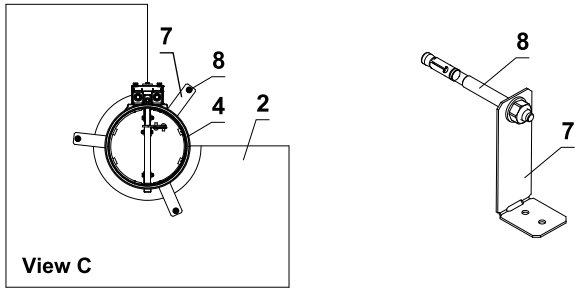

Ø100–400
t(mm): 1,5

Ø450–800
t(mm): 2,5

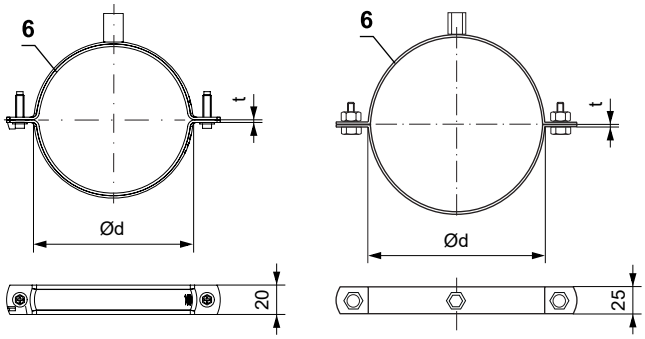

Ø100–400
Quick closing system
2x screw M6×20.
Fixing nut for threaded rod M8.

Ø450–800
2x screw connection M10x30 or threaded rods M10
Combined fixing nut for threaded rod M8+M10.

1 Solid wall construction
2 Solid ceiling construction
3 Gypsum wall constuciton
4 FDMR
5 Connecting air duct
6 Circular suspension with threaded rod
7 Damper bracket (according to order)
8 Nut M8 with anchor
9 Hexagon head screw
10 Gypsum grid from "U" profile

- The method of attachment must follow the minimum requirements for attachment and connection of ductwork in accordance with national regulations. Also, the elements can be suspended from the top, or supported from bottom, or fastened from the side.

Example of duct connection

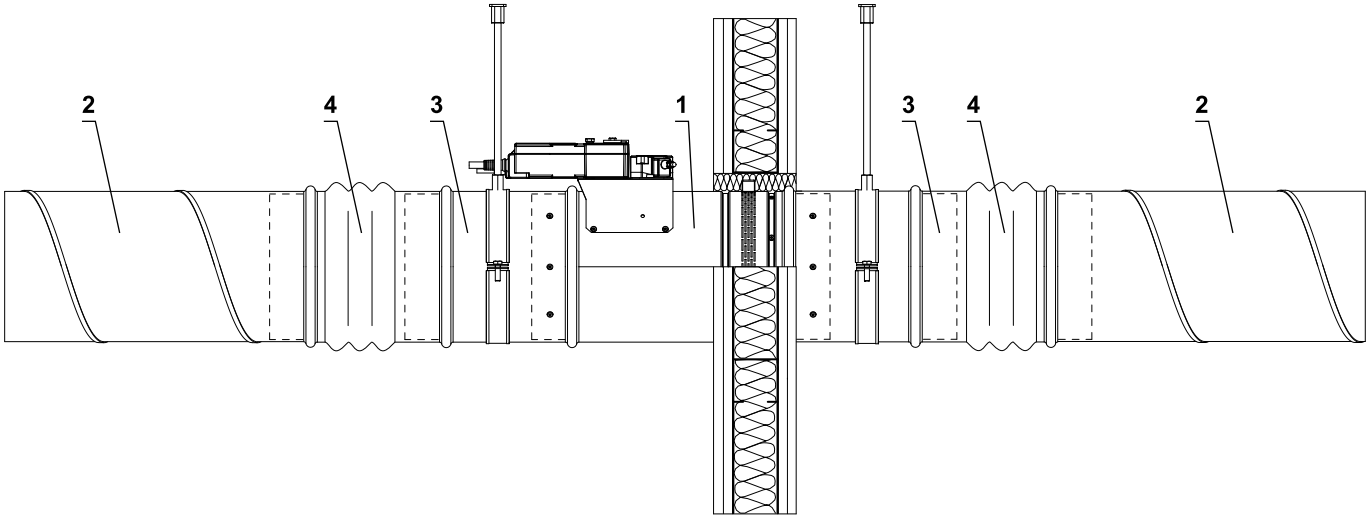

1 FDMR
2 Connecting air duct
3 Extension piece (if required)
4 Damping pad or breakaway connection as DW 144

VI. TECHNICAL DATA

Pressure loss

Pressure loss calculation

$$\Delta p = \xi \cdot \rho \cdot \frac{w^2}{2}$$

Δp	[Pa]	pressure loss
w	[m/s]	air flow speed in nominal damper section
ρ	[kg/m³]	air density
ξ	[-]	coefficient of local pressure loss for the nominal damper section

Determination of pressure loss by using diagram ρ = 1,2 kg/m³

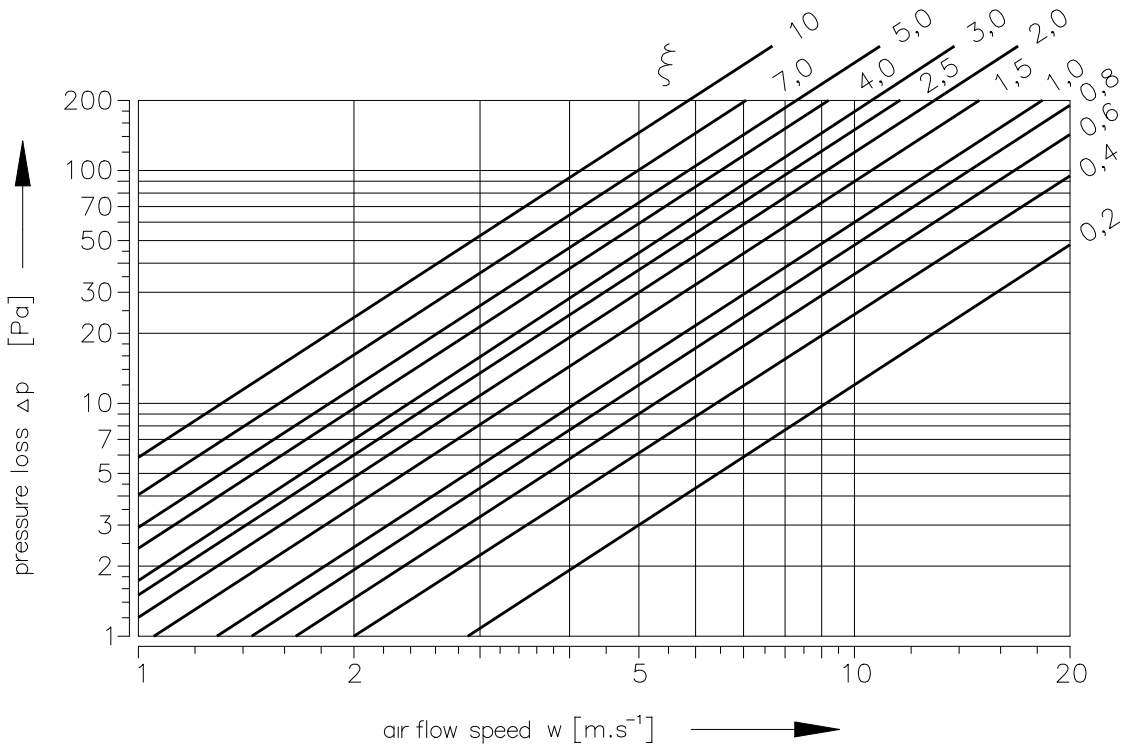

Coefficient of local pressure loss

D	100	125	140	150	160	180	200	225	250	280	300
ξ	1,812	1,380	1,110	0,892	0,747	0,627	0,531	0,892	0,747	0,627	0,576
D	**315**	**350**	**355**	**400**	**450**	**500**	**560**	**600**	**630**	**710**	**800**
ξ	0,531	0,471	0,455	0,393	0,344	0,307	0,273	0,258	0,243	0,111	0,099

Noise data

Level of acoustic output corrected with filter A

$$L_{WA} = L_W + K_A$$

L_{WA}	[dB(A)]	Level of acoustic power corrected by filter A
L_W	[dB]	Level of acoustic performance
K_A	[dB]	correction to the weight filter A

Level of acoustic output in octave ranges

$$L_{Woct} = L_W + L_{rel}$$

L_{Woct}	[dB]	spectrum of acoustic output in octave range
L_W	[dB]	Level of acoustic performance
L_{rel}	[dB]	relative level expressing the shape of the spectrum

Tables of acoustics values

Level of acoustic performance

	Lw [dB]																						K_A [dB]
	øD [mm]																						
w [m/s]	100	125	140	150	160	180	200	225	250	280	300	315	350	355	400	450	500	560	600	630	710	800	
3	<25	<25	<25	<25	<25	<25	<25	<25	<25	<25	<25	<25	<25	<25	<25	<25	<25	<25	<25	<25	<25	<25	-12
4	29	29	28	28	27	26	<25	27	27	26	26	26	26	26	26	26	26	26	26	26	<25	<25	-10
5	35	35	34	34	33	31	29	33	33	32	32	32	32	32	32	32	32	32	32	32	27	27	-8
6	39	39	39	38	37	36	34	38	37	37	37	37	37	36	36	36	36	36	37	36	31	32	-7
7	43	43	43	42	41	40	38	42	41	41	41	41	41	40	40	40	40	40	41	40	35	36	-6
8	47	47	46	46	45	44	42	45	45	44	44	44	44	44	44	44	44	44	44	44	39	39	-6
9	50	50	50	49	48	47	45	48	48	47	47	47	47	47	47	47	47	47	47	47	42	42	-5
10	53	53	52	52	51	49	47	51	51	50	50	50	50	49	49	49	50	50	50	50	45	45	-5
11	55	55	55	54	53	52	50	54	53	53	53	52	52	52	52	52	52	52	52	52	47	48	-4
12	58	57	57	56	55	54	52	56	55	55	55	55	55	54	54	54	54	54	55	55	49	50	-4

Relative level expressing the shape of the spectrum L_{rel}

	f [Hz]							
w [m/s]	63	125	250	500	1000	2000	4000	8000
2	-5	-7	-11	-17	-24	-33	-44	-56
3	-4	-5	-8	-13	-20	-28	-37	-49
4	-4	-5	-7	-11	-17	-24	-33	-44
5	-4	-4	-6	-9	-15	-22	-30	-40
6	-4	-4	-5	-8	-13	-20	-28	-37
7	-5	-4	-5	-8	-12	-18	-26	-35
8	-5	-4	-5	-7	-11	-17	-24	-33
9	-5	-4	-4	-6	-10	-16	-23	-32
10	-6	-4	-4	-6	-9	-15	-22	-30
11	-6	-4	-4	-6	-9	-14	-20	-29
12	-6	-4	-4	-5	-8	-13	-20	-28

VII. MATERIAL, FINISHING

- Damper casings are made from galvanized sheet metal without further surface treatment.
- Damper blades are made from fire resistant asbestos free boards made of mineral fibres.
- Manual control have cover made of mechanically resistant and durable plastic and the other parts are galvanized without further surface treatment.
- Fusible links are made of sheet brass, thickness 0,5 mm.
- Fasteners and springs are galvanized.
- According to the customer's requirements, dampers can be made of stainless steel material.

  Specifications for stainless-steel design:

  - Class A2 – Food-grade stainless steel (AISI 304 – BS EN 1.4301)
  - Class A4 – Chemistry-grade stainless steel (AISI 316, 316L – BS EN 1.4401, BS EN 1.4404)

  The respective stainless steel is the material for all components that are located or entering the damper inner space; components outside the damper casing are typically from galvanised sheet metal (fasteners for mounting the actuator or manual control, mechanical components except Item 4), frame components.

  The following components, including the fasteners, are made from stainless steel at all times:

  1) Damper casing and all components permanently attached
  2) Blade holders including pins, metal parts of blades
  3) Control components inside the damper (L-profile, pin with lever, rod, fasteners)
  4) Parts of a manual contol entering the inner space of a damper casing (lower sheet of a manual control, lock holder “1”, lock lever “2”, closing spring, 8 dia. stopper pin, manual control pin)
  5) Inspection opening cover including the stirrup and fasteners (if they are parts of the cover)
  6) Bearing for torque transfer from the lever with pin on the blade L-profile (made from AISI 440C)

  The damper blade is made from a board of homogeneous material Promatect-H or Promatect-MST, thickness according to damper diameter or is composite from two boards of Promatect-H, thickness 20 mm, connected with galvanised nailed “U” connectors which are sealed with Promat K84 from the outside.

  Fusible link is identical for all material variants of the dampers. Upon specification by customer, the fusible link can be made from A4 from stainless steel sheet metal.

  Thermoelectric activation device BAT is modified for stainless-steel variant of the dampers; standard galvanised screws are replaced with stainless-steel M4 screws of corresponding class. Damper casing has stainless-steel riveting M4 nuts.

  Plastic, rubber and silicon components, sealants, foaming tapes, glass-ceramic seals, housings, brass bearings of the blade, actuators, and end switches are identical for all material variants of the dampers.

  Some fasteners and components are only available in one class of stainless steel; the type will be used in all stainless-steel variants.

  The damper blade in the variant for chemical environments (Class A4) is always treated with a coating of chemically resistant Promat SR.

  Any other requirements for the design will be considered atypical and will be addressed on an individual basis.

VIII. TRANSPORTATION AND STORAGE

Logistic terms

- Dampers are delivered on pallets. As standard, the dampers are wrapped in plastic foil for protection during transport and must not be used for long-term storage. Temperature changes during transport can cause condensation of water inside the packaging and thereby cause corrosion of materials used in the dampers (e.g. white corrosion on zinc-coated items or mould on calcium silicate). Therefore, it is necessary to remove the transport packaging immediately after unloading to allow air to circulate around the product.
- The dampers must be stored in clean, dry, well ventilated and dust-free environment out of direct sunlight. Ensure protection against moisture and extreme temperatures (minumum temperature +5°C). The dampers must be protected against mechanical and accidental damage prior to installation.
- Another required packaging system should be approved and agreed by manufacturer. Packaging material is not returnable in case that another packaging system (material) is required and used and it is not included into final price of damper.
- Dampers are transported by box freight vehicles without direct weather impact, there must not occur any shocks and ambient temperature must not exceed +50°C. Dampers must be protected against impact when transported and manipulated. During transportation, the damper blade must be in the "CLOSED" position.
- Dampers must be stored indoor in environment without any aggressive vapours, gases or dust. Indoor temperature must be in the range from -30°C to +50°C and maximum relative humidity 95%.

IX. ASSEMBLY, ATTENDANCE AND MAINTENANCE

- Assembly, maintenance and damper function check can be done only by qualified and trained person, i.e. “AUTHORIZED PERSON” according to the manufacturer documentation. All works done on the fire dampers must be done according international and local norms and laws.
- All effective safety standards and directives must be observed during damper assembly.
- To ensure reliable damper function it is necessary to avoid blocking the actuating mechanism and contact surfaces with collected dust, fibre and sticky materials and solvents.
- Flange and screw joints must be conductively connected to protect against dangerous contact. 2 galvanized lock washers that are placed under the head of one screw and a fastened nut are used for conductive connection.

Manual operation - actuator control without electric voltage

- A special wrench (part of the actuator) can be used to manually turn the damper blade to any position. When the wrench is turned in the direction of the arrow, the damper blade rotates to its open position. As the blade rotation is stopped, in every position, the actuator will be locked. Unlocking is possible even manually as per instructions on the actuator, or by the activation of the supply voltage.
- If the actuator is manually locked, the damper blade will not close in the event of a fire after the activation of the thermoelectric activation device BAT. To restore correct damper operation, the actuator must be unlocked (manually or by applying power supply).

Limit switches

- If the damper is equipped with limit switches and these switches are not used during operation (e.g. because of a project change), they can be left on the damper and not connected (they need not be dismounted).
- On the other hand, if the limit switch is to be added to the damper design, the change can be implemented by change kit.
- These facts must be recorded in the respective operation documentation of the damper (record books of the damper, fire logs, etc.) and subsequently, adequate function checks must be carried out.

Installation / fixing the damper

- The damper casing shall not be deformed in the course of bricking in.
- Once the damper is built in, the damper blade shall not grind on the damper casing during opening or closing.

Protection of the damper casing against buckling during installation, especially for DN over 400 mm!

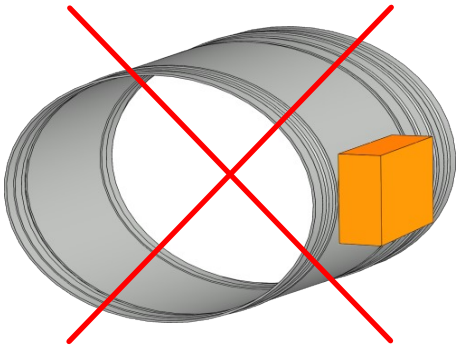

WRONG!

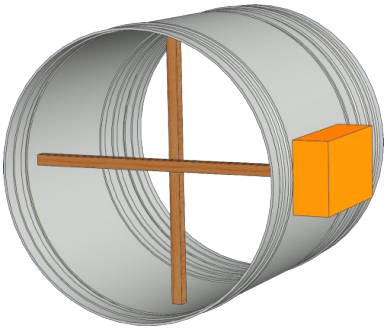

Brace with wooden blocks

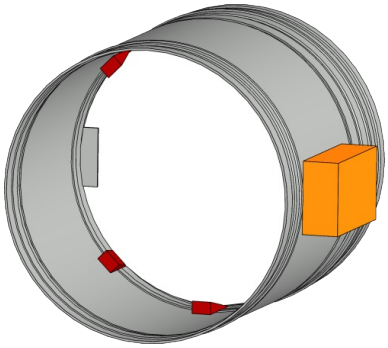

Brace with wedges

Change of manual control for the actuator or vice versa

DN 100 - DN 315

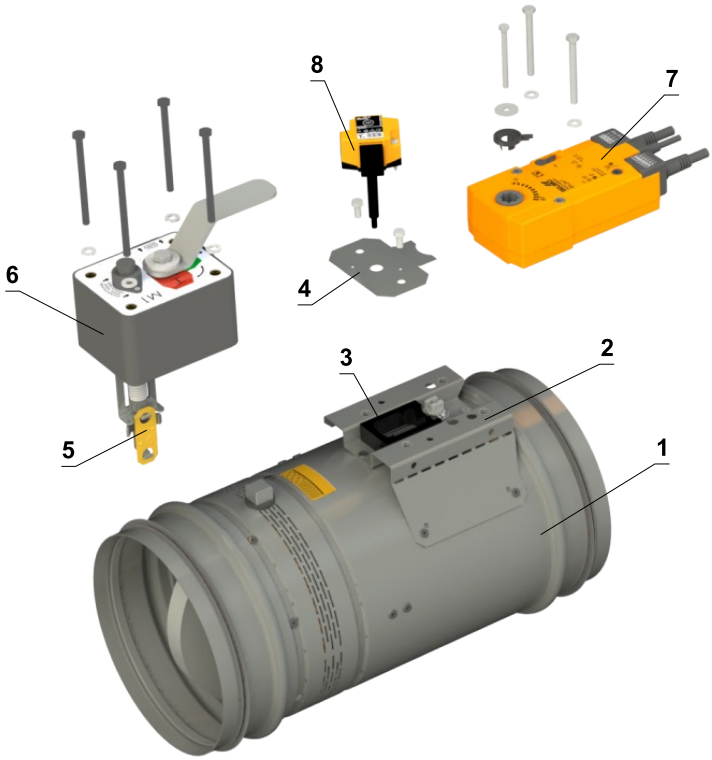

1 Damper
2 Mounting plate
3 Sealing of a mounting plate
4 Holder of thermoelectric activation device BAT
5 Fusible link
6 Manual control
7 Spring return actuator
8 Thermoelectric activation device BAT

DN 350 - DN 800

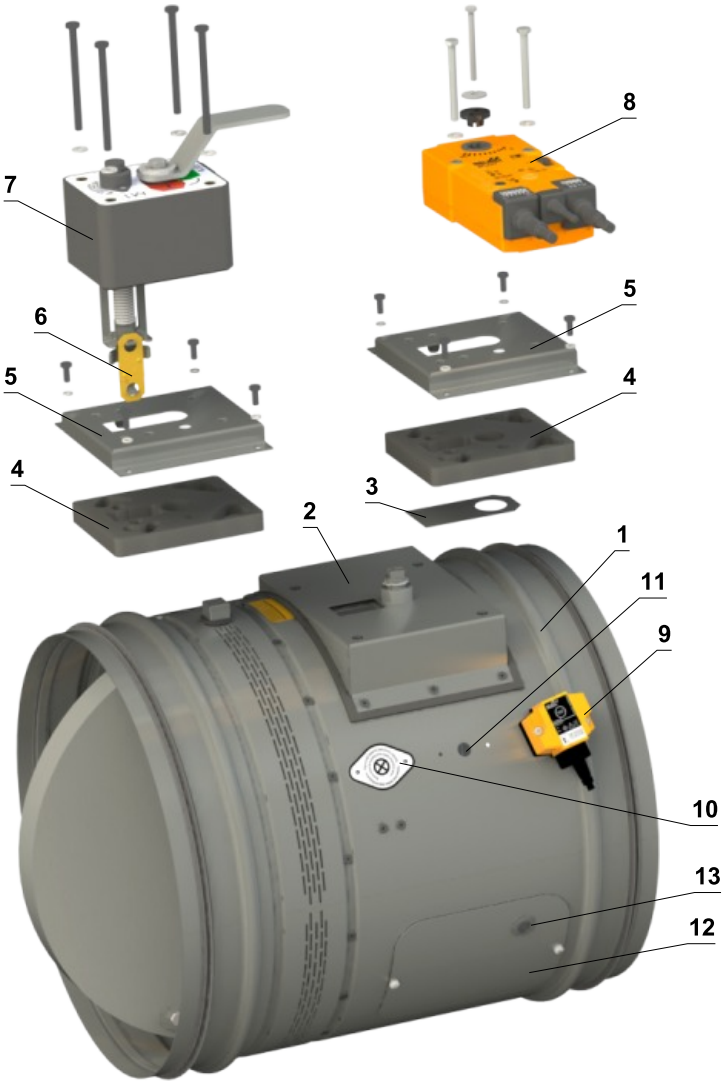

1 Damper
2 Mounting plate
3 Sealing cover
4 Sealing of a mounting plate
5 Cover of mounting plate
6 Fusible link
7 Manual control
8 Spring return actuator
9 Thermoelectric activation device BAT
10 Sensor sticker
11 Hole for temperature sensor / Sensor sticker
12 Inspection hole covering
13 Hole for camera

Entry into service and revisions

- Before putting the damper into operation, serviceability checks and functional tests must be carried out including testing of functionality of all electrical elements. After putting into operation these serviceability checks must be carried at least twice a year. If no defect is found during two subsequent serviceability checks, these checks can be carried out once a year.
- In case that dampers are found unable to serve for their function for any cause, it must be clearly marked. The operator is obliged to ensure that the damper is put into condition in which it is ready for function and meanwhile he is obliged to provide the fire protection by another appropriate way.
- Results of regular checks, imperfections found and all-important facts connected with the damper function must be recorded in the "FIRE BOOK" and immediately reported to the operator.
- Before entering the dampers with actuator into operation after their assembly and by sequential checks. Check of blade rotation into the breakdown position "CLOSED" can be done after disconnecting the actuator supply (e.g. by pressing the test button at the thermoelectric activation device BAT or disconnecting the supply from ELECTRICAL FIRE SIGNALISATION). Check of blade rotation back into the "OPEN" position can be done after restoration of power supply (e.g. by releasing the test button or restoration of supply from ELECTRICAL FIRE SIGNALISATION). Without power supply, the damper can be operated manually and fixed in any required position. Release of the locking mechanism can be achieved manually or automatically by applying the supply voltage. It is recommended to provide periodical checks, maintenance and service actions on fire equipment by authorized persons. The authorized persons can be trained by producer, or by authorized distributor. All effective safety standards and directives must be observed during fire damper assembly.
- Visual inspection of proper damper installation, inner area of a damper, damper blade, contact surfaces and silicon seal.
- For regular or exceptional inspection of interior of fire damper, micro-camera device can be used. On each fire damper is an inspection opening. In the case of inspection by camera, take out the black rubber cap, insert the camera inside the damper, check interior and at the end of inspection, put the rubber cap back tightly to cover the empty hole.

For dampers with manual control (designs .01, .11, .80), the following checks must be carried out

Check of a manual control and fusible link

- **To check the function of the manual control proceed as follows:**
- Turn the damper blade to "CLOSED" position as follows:
  - The damper blade is in "OPEN" position.
  - Press the control button of the manual control to turn the damper blade to "CLOSED" position.
  - Check the damper blade rotation to "CLOSED" position.
  - Damper blade closing shall be smooth and fast, the control lever shall be in „CLOSED“ position.
- Turn the damper blade to "OPEN" position as follows:
  - Turn the control lever by 90°.
  - Check the damper blade rotation to "OPEN" position.
  - The lever will automatically lock in "OPEN" position.
- **Check of function and condition of the fusible link:**
  - To check the function and the status of the fuse it's possible to remove the manual control from the casing of the fire damper which is attached to the damper casing with four screws M6.
  - Removing the fusible link from the fuse holder of a manual control, checks its correct functionality.
  - The manual control is identified as M1 to M5, depending on the closing spring strength.

For the designs with actuators, following checks must be carried out

- Check the rotation of the blade to "CLOSED" failure position after disconnection the power supply of the actuator (e.g. by pressing the test button on the thermoelectric activation device BAT or by disconnection the power supply from electrical fire signalization). Check the rotation of the blade back to "OPEN" position by restoring the power supply to the actuator (e.g. by releasing the test button or by restoring the power supply from electrical fire signalization).

Before putting the dampers into operation and during subsequent function checks, the following checks must be carried out for dampers with optical smoke detector

- The function checks of the optical smoke detector are to be carried out by employees of an authorized organization who have corresponding electrotechnical qualification and have been properly trained by the manufacturer. The function checks are to be carried out as a part of function checks of the fire dampers, at least 1x a year.
- For the function checks, the damper blade should be in "CLOSED" position with the fan off or with closed air regulation situated between the fan and the fire damper.

- Inspection opening disassembly
  - Unscrew the screws (2pcs) and remove the cover by tilting it.

Inspection opening detail

- Ensure each damper is fully checked for operational capability, control should be initiated from the control system or by manual control. Damper blades should open and close correctly and operation should be visually inspected and documented prior to handover.

How to proceed after Tf1 or Tf2 fuses have been activated

- If the fusible link **Tf1** is interrupted (due to temperature outside the duct), it is necessary to replace the spring return actuator. → see page 10
- If the fusible link **Tf2** is interrupted (due to temperature inside the duct) , only the spare part ZBAT 72 needs to be replaced (acc.to the activation temperature). → see page 10

X. ORDERING INFORMATIONS

Ordering key

1	2	3		4	5	6	7	8		9	10	11
FDMR	UK	DN 200*	/	300	.01	104	H	RS	-	ZN	IW	G

** Dimension DN 350 can only be ordered for circular pipes in RS design.*

EXAMPLES:

FDMR UK DN 200/300 .40 RS-ZN

Fire damper FDMR, dimension DN 200 mm, built length 300 mm, control design with spring return actuator AC 230 V, standard activation temperature 72 °C, without installation kit, connection to straight circular duct, galvanized material variant, standard silicon seal.

FDMR UK DN 200/300 .01 104 H RS-ZN IW G

Fire damper FDMR, dimension DN 200 mm, built length 300 mm, control design with manual control, activation temperature 104 °C, with installation holders, connection to straight circular duct, galvanized material variant, impregnation against humidity, silicone-free rubber.

1| Fire damper type - FDMR

2| Country of destination

3| Damper dimensions øD → see page 17

4| Built length - 300 mm

5| Damper design

.01	Manual control and thermal
.11	Manual control and thermal with a terminal switch („CLOSED“)
.80	Manual control and thermal with two terminal switches („OPEN“, „CLOSED“)
.40	With actuator BF 230-TN (BFL, BFN 230-T) - voltage AC 230 V
.50	With actuator BF 24-TN (BFL, BFN 24-T) - voltage AC/DC 24 V

6| Activation temperature

Manual control		Spring return actuator control
	72 °C *	72 °C *
104	104 °C	
147	147 °C	

** Standard activation temperature*

7| Installation kit

	Without installation kit
H	Installation holders

8| Duct connection

RS	Straight connection to circular duct
RF	Flanged connection to circular duct

9| Material and other design options

ZN	Galvanized
A2	Stainless steel 1.4301 (AISI 304)
A4	Stainless steel 1.4404 (AISI 316L) - included damper blade impregnation against chemical - type PROMAT SR

10| Surface treatment

	Without surface treatment
IW	Damper blade impregnation, impregnating agent PROMAT 2000 - impregnation against humidity
IA	Damper blade impregnation, impregnating agent PROMAT SR - impregnation against chemical

11| Cold seal variant

	Silicone rubber *
G	Silicone-free rubber

** Standard cold seal*

Accessories

Installation holder

1	2
INSTALLATION HOLDER	FDMR

1| Accessory type - installation holder

2| Fire damper type - FDMR

Data label

- Data label is placed on the damper casing (example)

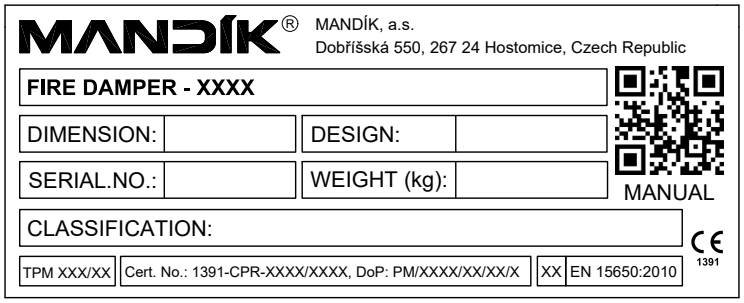

The producer reserves the right for innovations of the product.
For actual product information see www.mandik.co.uk

MANDÍK®

www.mandik.co.uk

Manufacturer
MANDÍK, a. s. • Dobříšská 550 • 267 24 Hostomice • Czech Republic • Tel.: +420 311 706 742 • E-Mail: mandik@mandik.cz
Authorized representative
MANDIK UK Ltd • 130 Aztec West • Bristol BS32 4UB • United Kingdom • Tel.: +44 117 4526376 • E-Mail: help@mandik.co.uk