MANDÍK

TPM 162/22
Version 2026-09-25

FDMQ 120

Fire damper

Technical Documentation
Installation, Commissioning, Operation, Maintenance and Service Manual

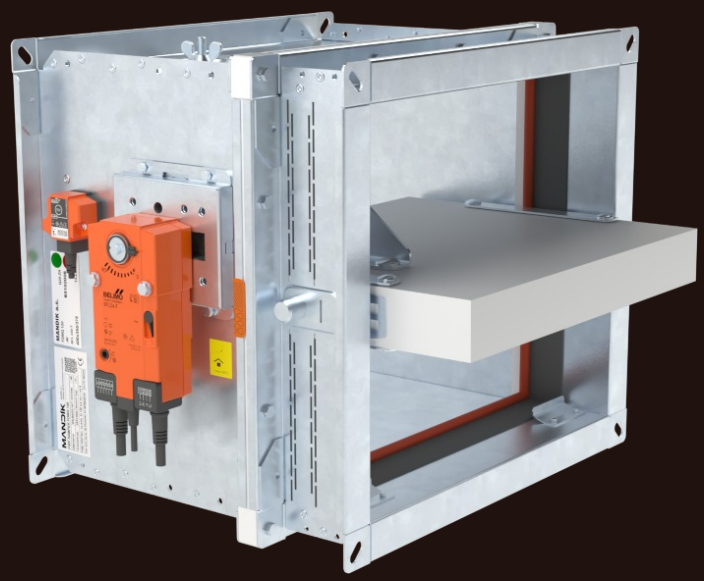

CE 1391

CCPi ASSESSED PRODUCT INFORMATION 015800191/1227 Fire dampers

MANDÍK®
www.mandik.com

MANDÍK, a. s. • Dobříšská 550 • 267 24 Hostomice • Czech Republic • Tel.: +420 311 706 742 • E-Mail: mandik@mandik.cz

These technical specifications state a row of manufactured sizes and models of fire dampers FDMQ 120
It is valid for production, designing, ordering, delivery, maintenance and operation.

CONTENT

I. GENERAL....3
Description....3
II. DESIGN....4
Design with manual control....4
Design with spring return actuator....6
Design with the communication and supply device....12
III. DIMENSIONS....14
Technical parameters....16
IV. INSTALLATION....22
Placement and installation....22
Statement of installations....24
Installation in solid wall construction....25
Installation outside solid wall construction....29
Installation in gypsum wall construction....33
Installation outside gypsum wall construction....37
Installation in sandwich wall construction....41
Installation in shaft wall construction....42
Installation in solid ceiling construction....45
V. SUSPENSION SYSTEMS....48
Example of duct connection....52
VI. TECHNICAL DATA....53
Pressure loss....53
Noise data....55
VII. MATERIAL, FINISHING....56
VIII. TRANSPORTATION, STORAGE AND WARRANTY....57
Logistic terms....57
Warranty....57
IX. ASSEMBLY, ATTENDANCE AND MAINTENANCE....58
Entry into service and revisions....62
X. ORDERING INFORMATIONS....64
Ordering key....64
Accessories....65
Data label....66

I. GENERAL

Description

Fire dampers are shutters in ducts of air-conditioning devices that prevent the spread of fire and combustion products from one fire segment to the other one by means of closing the duct in the points of fire separating constructions.

Damper blade automatically closes air duct using a closing spring or a spring return actuator. The closing spring is actuated by pressing a button on the manual control or by melting a fusible link.

The return spring of the actuator is actuated when a thermoelectric activation device BAT is activated, when a test button on BAT is pressed or when power supply of the actuator is interrupted.

After closing the blade, the damper is sealed with silicon against smoke penetration. On request by customer, the damper can be supplied silicon-free. In the closed position, the damper is also sealed with material which increases its volume due to increasing temperature and air proofs the air duct.

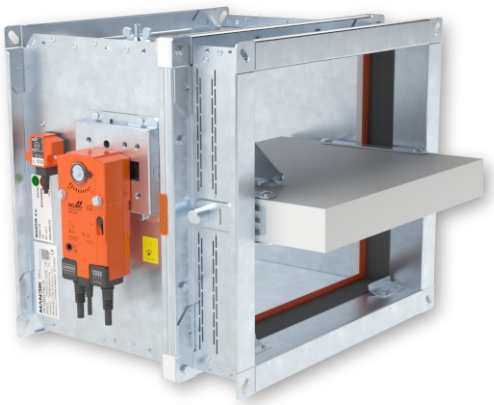

FDMQ 120 with spring return actuator

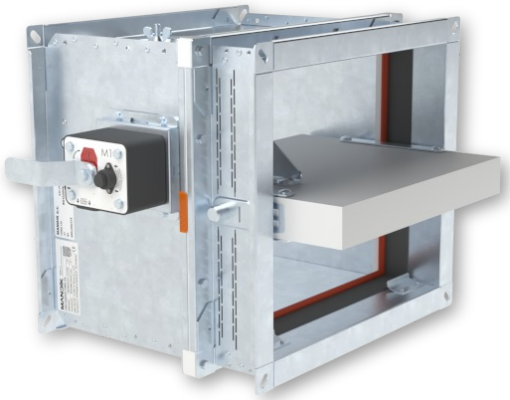

FDMQ 120 with manual control

Damper characteristics

- CE certified acc. to EN 15650
- Tested in accordance with EN 1366-2
- Classified acc. to EN 13501-3+A1
- External Casing leakage class min. ATC 3 (old marking “C“) acc. to EN 1751, Internal leakage min. class 2 acc. to EN 1751
- Cycling test in class C_{10000} acc. to EN 15650
- Corrosion resistant acc. to EN 15650
- Certificate of constancy of performance No. 1391-CPR-XXXX/XXXX
- Declaration of Perfomance No. PM/FDMQ 120/01/XX/X
- Hygienic assessment of fire dampers - Report No. 1.6/pos/19/19b

Working conditions

- Exact damper function is provided under the following conditions:
  - maximum air velocity 12 m/s
  - maximum pressure difference 1200 Pa
  - the air circulation in the whole damper section must be secured steady over the entire surface.
- Dampers can be installed with horizonal blade axis.
- Dampers are suitable for systems without abrasive, chemical and adhesive particles.
- Dampers are designed for macroclimatic areas with mild climate according to EN IEC 60 721-3-3 ed.2., class 3K22. (Environment 3K22 is typically protected place with regulated temperature)
- Temperature in the place of installation is permitted to range from -30°C to +50°C.

II. DESIGN

Design with manual control

Design .01

- Design with manual control with a fusible link which actuates the shutting device, after the nominal activation temperature 72°C has been reached.
- Automatic initiation of the manual control is not activated if the temperature does not exceed 70°C.
- In case that other activation temperatures are required, fusible links with nominal activation temperature +104°C or +147°C can be supplied (this requirement must be specified in the order).

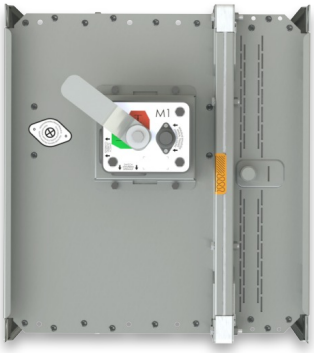

Design .01

ATTENTION:

- Manual controls are produced in four sizes M2 to M5, difference is only in size of a closing spring, which closes the fire damper.
- For the size of fire dampers is always assigned the size of the manual control → see pages 16 to 21
- It is not recommended to use different size of the manual control than given by the manufacturer, otherwise there is a risk of damaging the fire damper.

Design .11

- Design .01 with manual control can be complemented with a limit switch signaling of the damper blade position "CLOSED".
- Cable is connected directly to limit switch.
- Limit switch detail → see page 5

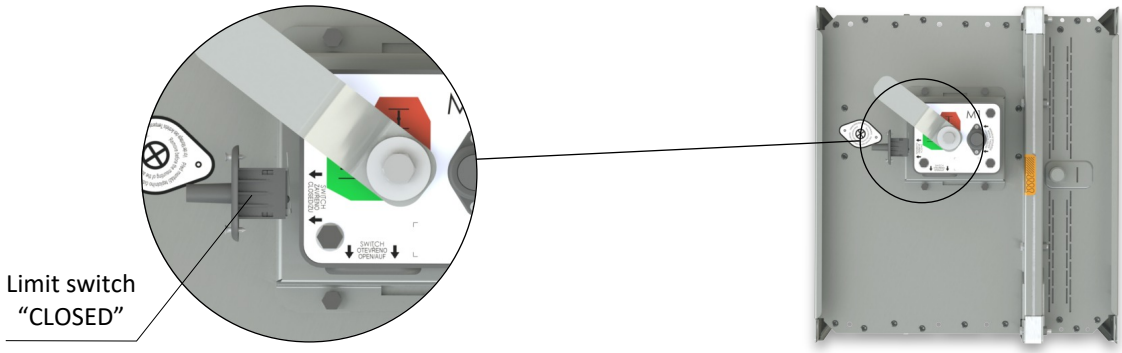

Design .11

Design .80

- Design .01 with manual control can be complemented with two limit switches signaling of the damper blade position "CLOSED" and "OPEN".
- Cables are connected directly to limit switches.
- Limit switch detail → see page 5

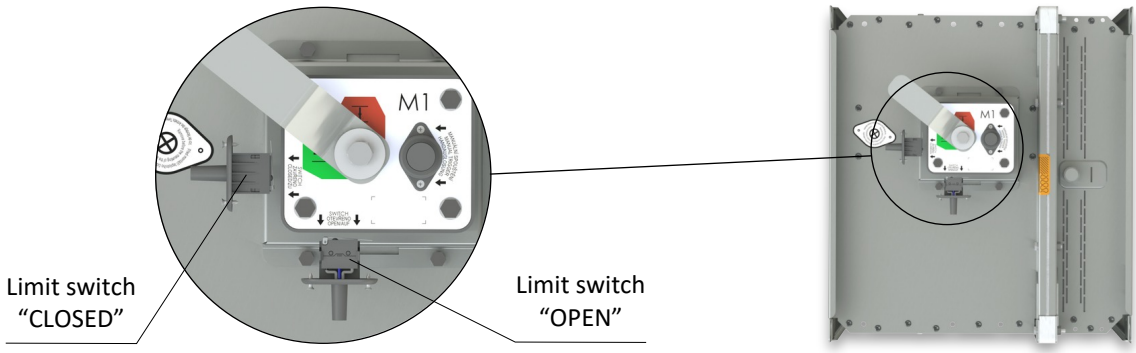

Design .80

Manual control

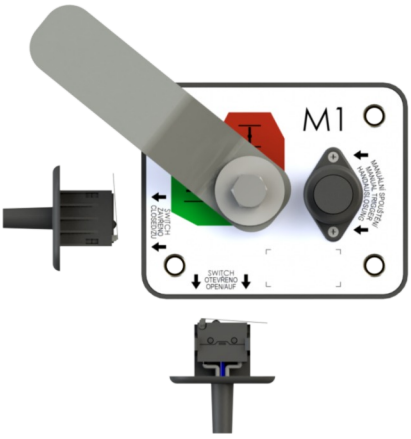

Fusible link replacement:*

1. The mechanism (damper) must be in the closed position (indicated by the red area on the sticker).
2. Press the Close button.
3. Using adjustable pliers, squeeze the fusible link clips together.
4. Pull the fusible link out of the clips.
5. Using adjustable pliers, squeeze the fusible link clips together again.
6. Insert the new fusible link into the clips.

Function check:**

7. Open the mechanism (damper) by moving the lever to the Open position (indicated by the green area on the sticker).
8. Press the Close button and check that the mechanism closes correctly. Repeat steps 7 and 8 at least 3 times.

* The mechanism can be removed for change of the fusible link.
** Caution: Risk of injury from moving parts.

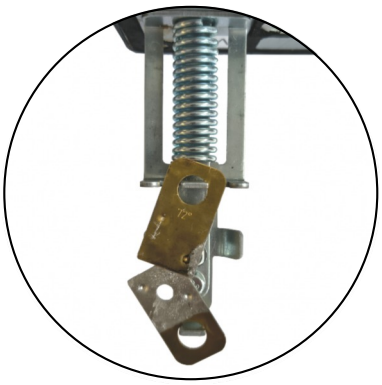

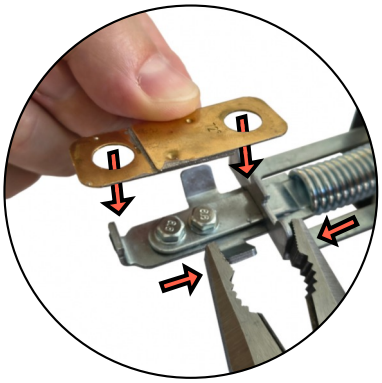

Limit switch G905-300E03W1

<u>This limit switch is possible to connect in two following ways</u>

- CUT-OFF if the arm is moving … connect wire 1+2
- SWITCH-ON if the arm is moving … connect wire 1+4

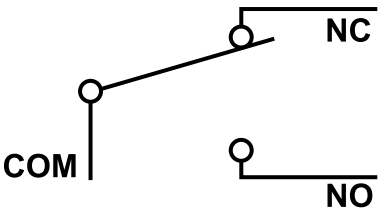

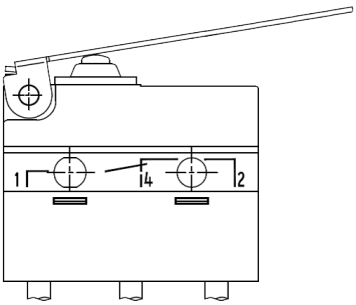

Nominal voltage and maximal current	AC 230V / 5A
Class of protection	IP 67
Working temperature	-25°C … +120°C

1(COM) - black wire
2(NC) - gray wire
4(NO) - blue wire

Design with spring return actuator

Design .40 and .50

- The fire dampers are equipped with Belimo spring return actuators with thermoelectric activation device BAT. The spring return actuator types are BFL, BFN or BF depending on the damper size. (Further mentioned as „actuator“).
- After being connected to power supply 230V or AC/DC 24V, the actuator rotates the damper blade to the operating position "OPEN" and at the same time pre-stretches its return spring.
- When the actuator is power supplied, the damper blade is in the position "OPEN" and the return spring is pre-stretched.
- Time needed for full opening of the damper blade from the position "CLOSED" to the position "OPEN" is maximum 120 sec. If the actuator power supply is interrupted (due to loss of supply voltage, or pressing a test button on the thermoelectric activation device BAT), the actuator rotates the damper blade to the breakdown position "CLOSED".
- The time of closing the damper blade from the position "OPEN" to the position "CLOSED" takes maximum 20 sec.
- In case that the power supply is restored again (the blade can be in any position), the actuator starts to rotate the damper blade back to the position "OPEN".
- A thermoelectric activation device BAT, which contains two fusible links Tf1 and Tf2, is an integral part of the actuator.
- These fuses are activated when temperature +72°C has been reached (the fuse Tf1 due to temperature outside the duct and the fuse Tf2 due to temperature inside the duct). The thermoelectric activation device can also be equipped with a Tf2 fusible link type ZBAT 95/120/140 (must be specified in the order). In this case, the activation temperature inside the duct is +95°C, +120°C or +140°C (depending on the type).
- After the fusible link Tf1 or Tf2 has been activated, the power supply is permanently and irreversibly interrupted and the actuator, by means of the pre-stretched spring, rotates the damper blade into the breakdown position "CLOSED".
- Signalisation of damper blade position "OPEN" and "CLOSE" is provided by two microswitches.

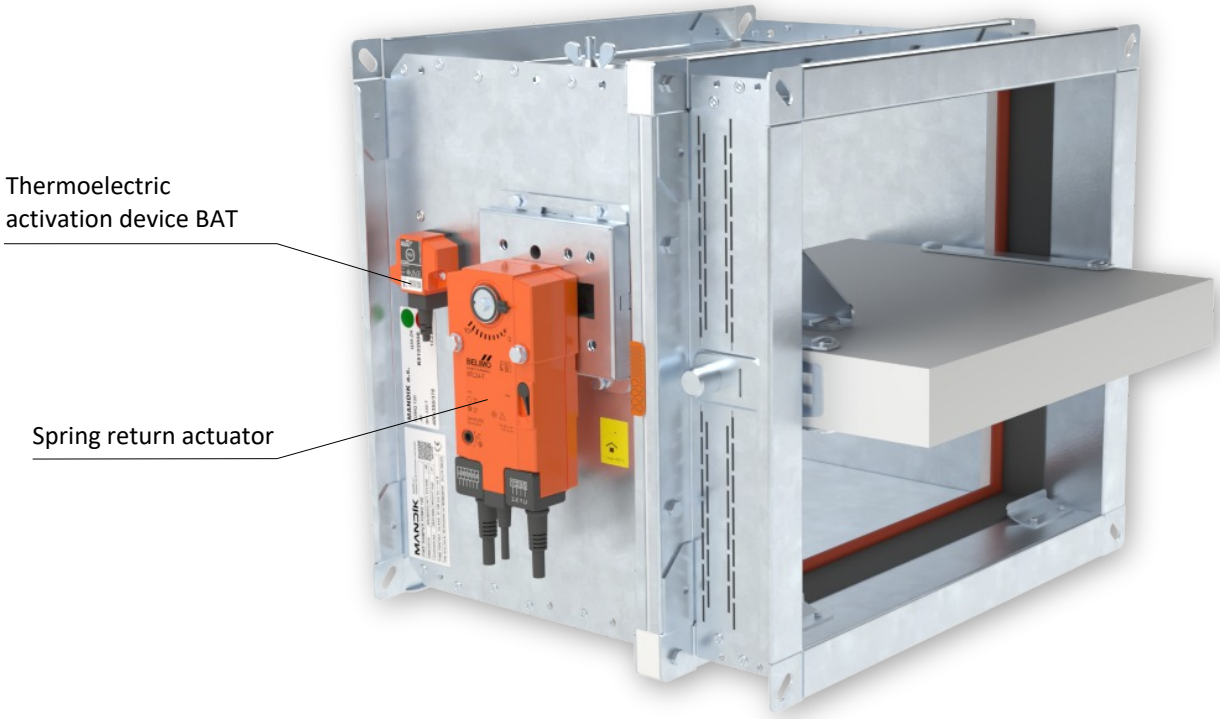

Design .40 and .50

Actuator BELIMO BFL 230-T

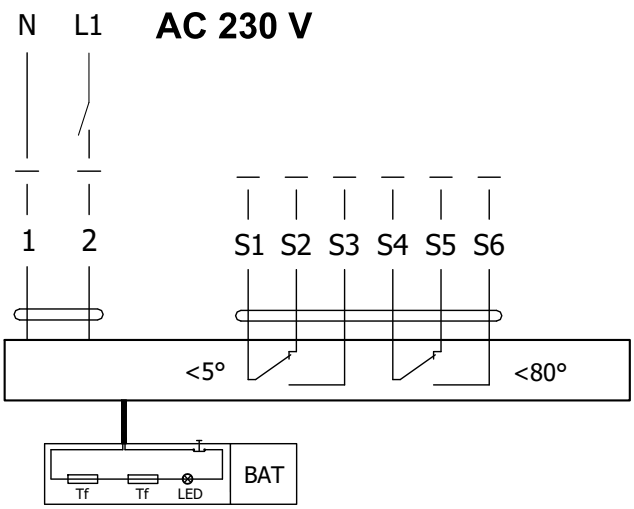

Actuator BELIMO BFL 24-T(-ST)

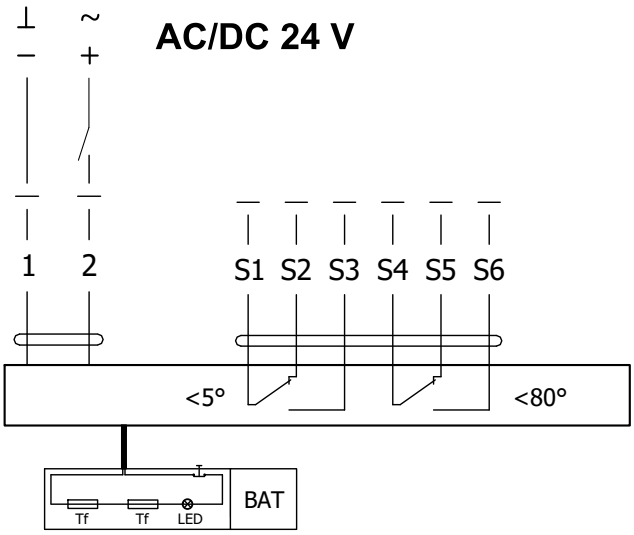

Actuator BELIMO BFL 230-T(-ST), BFL 24-T(-ST)		
Actuator BELIMO - 4 Nm/ 3 Nm Spring	**BFL 230-T(-ST)**	**BFL 24-T(-ST)**
Power voltage	AC 230 V 50/60Hz	AC/DC 24 V 50/60Hz
Power consumption - in operation - in rest position	2,6 W 0,7 W	2,0 W 0,7 W
Dimensioning	4 VA (Imax 4 A @ 5 ms)	2,8 VA (Imax 2,9 A @ 5 ms)
Protection class	II	III
Degree of protection	IP 54	
Running time - motor - spring return	< 60 s ~ 20 s	
Ambient temperature - normal duty - safety duty - non-operating temperature	 -30°C … +55°C The safe position will be attained up to max. +75°C -40°C … +55°C	
Connection - supply/control - auxiliary switch	cable 1 m, 2 x 0,75 mm² (BFL 2xx-T-ST) with 3-pin plug-in connectors cable 1 m, 6 x 0,75 mm² (BFL 2xx-T-ST) with 6-pin plug-in connectors	
Response temperature fusible link	duct outside temperature +72°C duct inside temperature +72°C	

Actuator BELIMO BFN 230-T

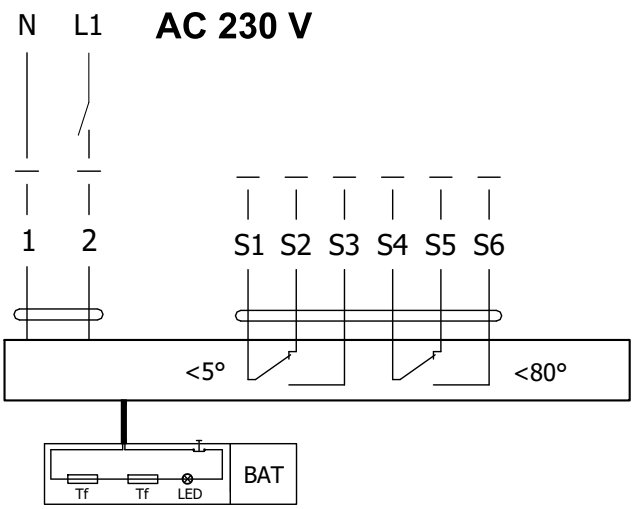

Actuator BELIMO BFN 24-T(-ST)

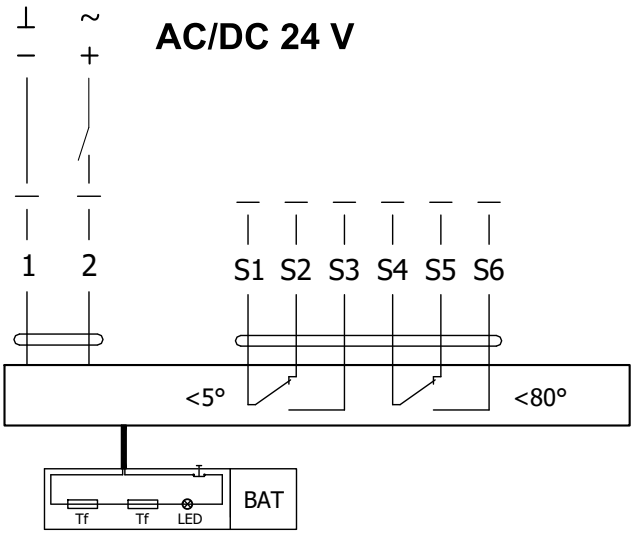

Actuator BELIMO BFN 230-T(-ST), BFN 24-T(-ST)		
Actuator BELIMO - 9 Nm/ 7 Nm Spring	**BFN 230-T(-ST)**	**BFN 24-T(-ST)**
Power voltage	AC 230 V 50/60Hz	AC/DC 24 V 50/60Hz
Power consumption - in operation - in rest position	3,5 W 1,3 W	3,2 W 1,2 W
Dimensioning	6,5 VA (Imax 4 A @ 5 ms)	4,3 VA (Imax 2,9 A @ 5 ms)
Protection class	II	III
Degree of protection	IP 54	
Running time - motor - spring return	< 60 s ~ 20 s	
Ambient temperature - normal duty - safety duty - non-operating temperature	 -30°C … +55°C The safe position will be attained up to max. +75°C -40°C … +55°C	
Connection - supply/control - auxiliary switch	cable 1 m, 2 x 0,75 mm² (BFN 2xx-T-ST) with 3-pin plug-in connectors cable 1 m, 6 x 0,75 mm² (BFN 2xx-T-ST) with 6-pin plug-in connectors	
Response temperature fusible link	duct outside temperature +72°C duct inside temperature +72°C	

Actuator BELIMO BF 230-TN

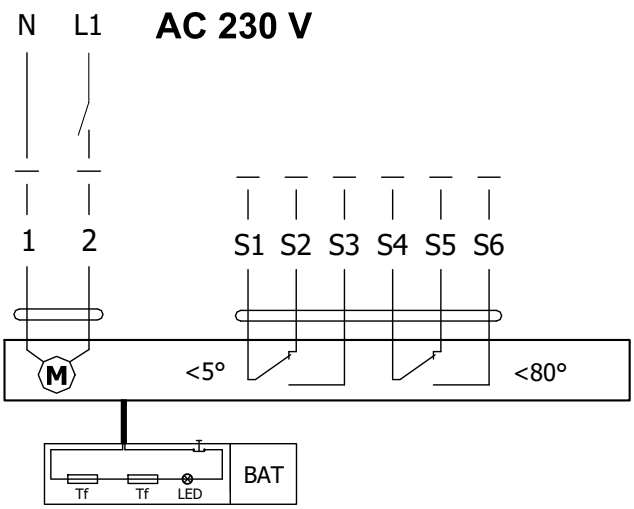

Actuator BELIMO BF 24-TN (-ST)

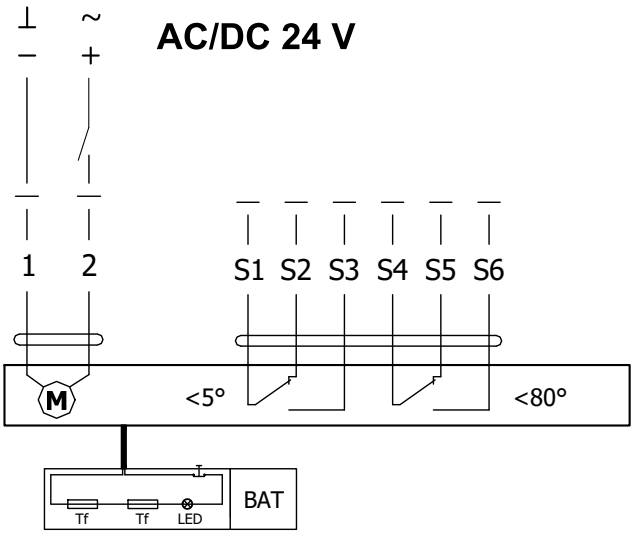

Actuator BELIMO BF 230-TN(-ST), BF 24-TN(-ST)		
Actuator BELIMO - 18 Nm/ 12 Nm Spring	**BF 230-TN(-ST)**	**BF 24-TN(-ST)**
Power voltage	AC 230 V 50/60Hz	AC/DC 24 V 50/60Hz
Power consumption - in operation - in rest position	8,5 W 3 W	7 W 2 W
Dimensioning	11 VA (Imax 8,3 A @ 5 ms)	10 VA (Imax 8,3 A @ 5 ms)
Protection class	II	III
Degree of protection	IP 54	
Running time - motor - spring return	120 s ~ 16 s	
Ambient temperature - normal duty - safety duty - non-operating temperature	 -30°C … +50°C The safe position will be attained up to max. +75°C -40°C … +50°C	
Connection - supply/control - auxiliary switch	cable 1 m, 2 x 0,75 mm² (BF 2xx-TN-ST) with 3-pin plug-in connectors cable 1 m, 6 x 0,75 mm² (BF 2xx-TN-ST) with 6-pin plug-in connectors	
Response temperature fusible link	duct outside temperature +72°C duct inside temperature +72°C	

Thermoelectric activation device BAT

- If the fusible link Tf1 is interrupted (due to temperature outside the duct), it is necessary to replace the spring return actuator. Thermoelectric activation device BAT is integral part of the actuator.
- If the fusible link Tf2 is interrupted (due to temperature inside the duct), only the spare part ZBAT 72 (95/120/140) needs to be replaced (acc.to the activation temperature).
- When one of the fusible links responds, the supply voltage is interrupted permanently and irreversibly.
- The function (interruption of the supply voltage) can be checked by pressing the test button.
- Installation is carried out with the pre-assembled, self-tapping screws.

BELIMO ZBAT 72
Black (BK) = 72°C (standard)

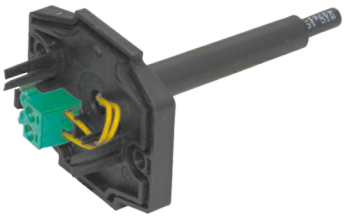

BELIMO ZBAT 95
Grey (GY) = 95°C

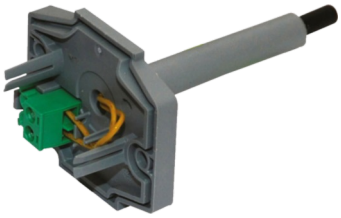

BELIMO ZBAT 120
Orange (OG) = 120°C

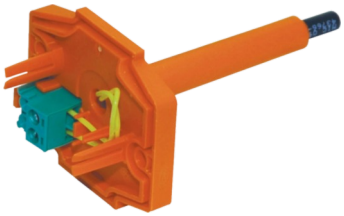

BELIMO ZBAT 140
Red (RD) = 140°C

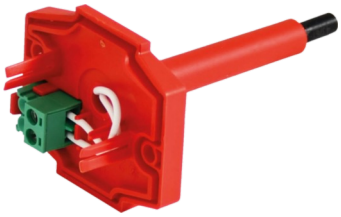

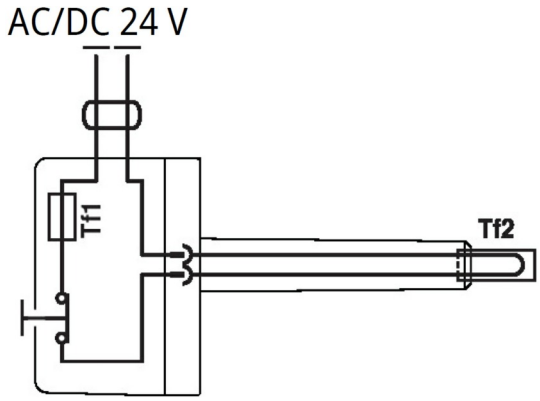

Thermoelectric activation device BAT 72 (95/120/140)	
Power voltage	AC/DC 24 V 50/60Hz
Rated current	1 A
AC/DC throughput resistance	<1 Ω
Protection class	III
Degree of protection	IP 54
Probe length	65 mm
Ambient temperature Storage temperature Ambient humidity	-30°C … +50°C -40°C … +50°C Max. 95% RH, non-condensing
Connection supply	Cable 1 m, 2 x 0.5 mm², Betaflam cable heatresistant up to 145°C
Response temperature fusible link	Duct inside temperature +72 (95/120/140)°C Duct outside temperature +72 (95/120/140)°C

Design .41 and .51

- Design .41 or .51 with actuator and smoke detector ORS 142 K. The voltage can be AC 230 V or 24 V DC. Design .41 with voltage AC 230 V is equipped with communication and supply device BKN 230-24-MOD and with actuator BF 24-TN (BFL 24-T, BFN 24-T).
- The smoke detector is activated when smoke spreads in air duct system. Deactivation of the smoke detector alarm status is provided by interruption of supply voltage for min. 2s.
- Signalisation of damper blade position "OPEN" and "CLOSE" is provided by two microswitches.

Design .41 with actuator BF 24-TN (BFL, BFN 24-T), with smoke detector ORS 142 K and with supply device BKN 230-24-MOD (voltage AC 230 V)

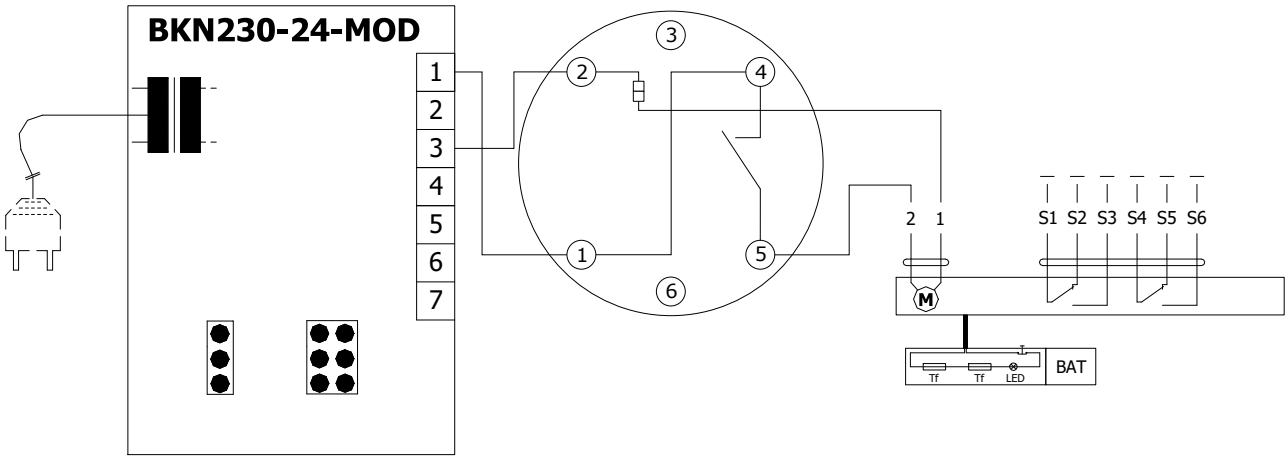

Design .51 with actuator BF 24-TN (BFL, BFN 24-T), with smoke detector ORS 142 K (voltage 24 V DC)

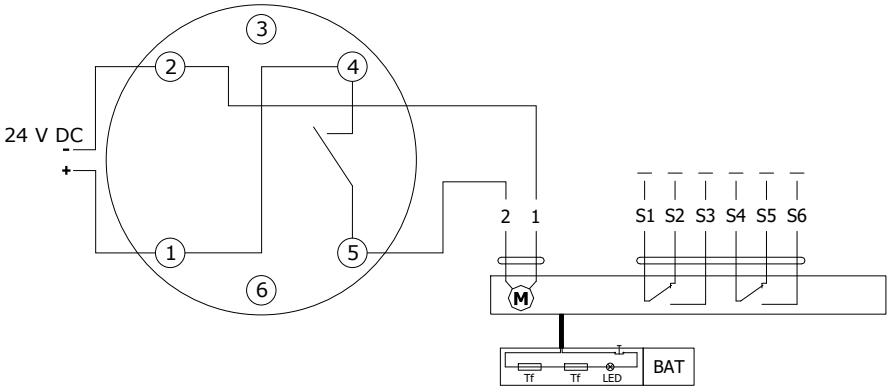

Communication and supply device BKN 230-24-MOD	
Nominal voltage	AC 230 V 50/60Hz
Power consumption	3 W (operating position)
Dimensioning	14 VA (including actuator)
Protection Class	II
Degree of protection	IP 40
Ambient temperature Non-operating temperature	-20°C … +50°C -40°C … +80°C
Connection - net - motor - terminal board	cable 0,9 m with EURO plug type 26 6-pole connector, 3-pole connector screw terminals for cable 2x1,5 mm²

Design with the communication and supply device

Design .63, 63S

- Design with the communication and supply device BKN 230-24-MOD and actuator BF 24-TN-ST (BFL 24-T-ST, BFN 24-T-ST) for communication with control systems using the Modbus RTU or BACnet MS / TP. Design 63. can be extended with an optical smoke detector ORS 142 K (design .63S).
- The wiring of the line is to be carried out in accordance with applicable RS485 regulations.
- Parameterization of the communication is done using DIL switches.
- BKN 230-24-MOD can be installed separately, without a connection to a master control system, in which case the connection bridge between the terminals 1 and 4 must be installed.
- If the test button on BAT is pressed or if the power supply (e.g. by a signal from ELECTRICAL FIRE SIGNALISATION) is disconnected, the damper blade position will be "FAILURE".
- For design .63S the smoke detector is activated when smoke spreads in air duct system. Deactivation of the smoke detector alarm status is provided by interruption of supply voltage for min. 2s.

Design with communication and supply device BKN 230-24-MOD, with actuator BF 24-TN-ST (BFL 24-T-ST, BFN 24-T-ST) and smoke detector ORS 142 K

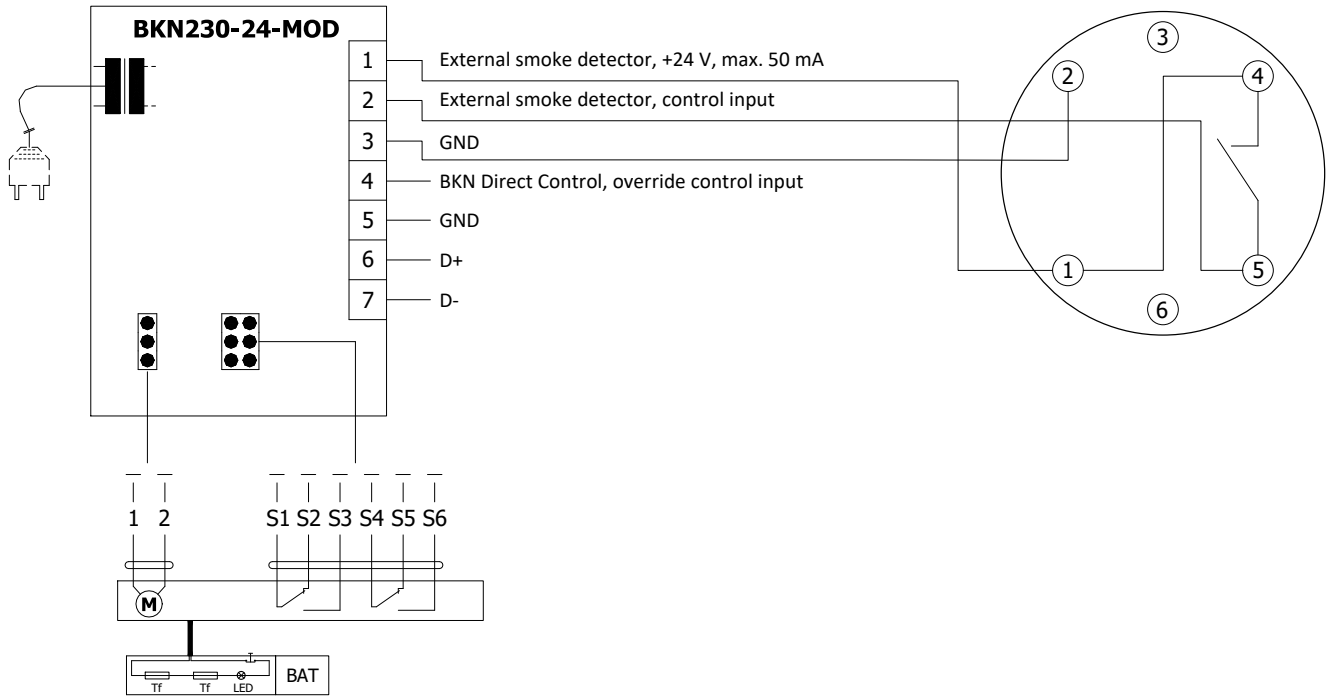

Communication and supply device BKN 230-24-MOD	
Nominal voltage	AC 230 V 50/60Hz
Power consumption	3 W (operating position)
Dimensioning	14 VA (including actuator)
Protection Class	II
Degree of protection	IP 40
Ambient temperature Non-operating temperature	-20°C ... +50°C -40°C ... +80°C
Connection - net - motor - terminal board	cable 0,9 m with EURO plug type 26 6-pole connector, 3-pole connector screw terminals for cable 2x1,5 mm²

Optical smoke detector ORS 142 K with the socket 143A

- The smoke detector ORS 142 K is used for early smoke detection in rooms or inside the ventilation system.
- The sensor operates on the light scatter principle. Inside the scanning chamber is a light source and a light sensor, in the normal state the light from the source does not fall on the senzor. Only when smoke enters the scanning chamber the light is scattered and falls on the senzor.
- The smoke detector can be connected directly to the actuator (design .41 and .51) which, in case of smoke detection, passes to the safety position, or to the BKN communication and supply device (design .63).
- By early detection of smoke, it can be effectively prevented from spreading of smoke through the ventilation system. In addition to smoke detection, the sensor can distinguish and signal slight and heavy contamination, e.g. the presence of large amounts of dust.
- The ORS 142 K smoke detector has an alarm memory, i.e. if the alarm is triggered, the safety relay opens and stays in this state even if the smoke disappears from the scanning chamber. The sensor remains in the alarm state until the power supply is briefly reset.
- On the pin 3, an external device can be connected via RS-Bus communication to report the status of the sensor.
- Pin 6 has no connection to the detector and is designed as a load-bearing structure in the base.

ORS 142 K

Socket 143A

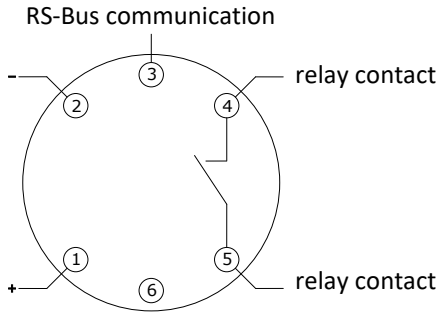

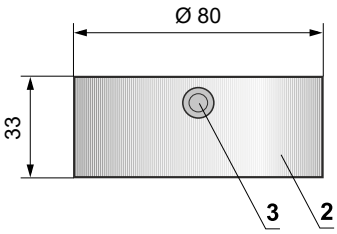

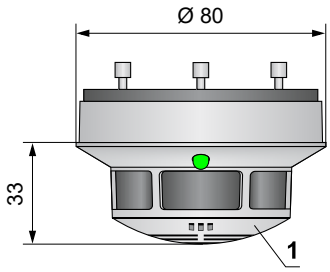

Relay contact		LED	
In operation	4 5	Green	Shines
Slight contamination		Green / Yellow	Flashes
Heavy contamination		Green / Yellow	Flashes
Fault	4 5	Yellow	Shines
Alarm		Red	Shines
Power Off		Off	–

1 ORS 142 K
2 Socket 143A
3 Side cable entries Ø 9mm
4 Rear cable entries Ø 9mm
5 Fixing hole Ø 4,5 mm
6 Fixing hole Ø 3,7 mm

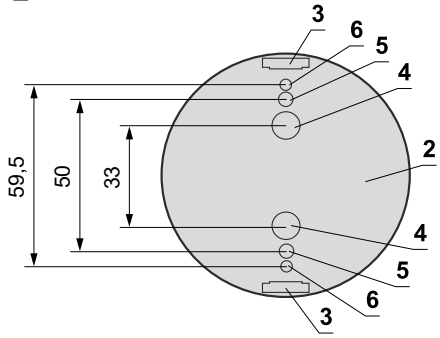

Optical smoke detector ORS 142 K with the socket 143A	
Operating voltage	18 … 28 V DC
Residual ripple	≤ 200 mV
Power Consumption Socket (without actuator)	max. 22 mA
Degree of protection	IP 42
Ambient temperature	-20°C … +75°C
Aditional temperature senzor	+70°C
Connection - net - motor - communication and supply device BKN	Cabel 1m, connected to terminals 1, 2 and 4 Actuator connected on the terminals 2 and 5 Cabel 1m, connected to terminals 1, 2, 4 and 5

III. DIMENSIONS

FDMQ 120 with manual control

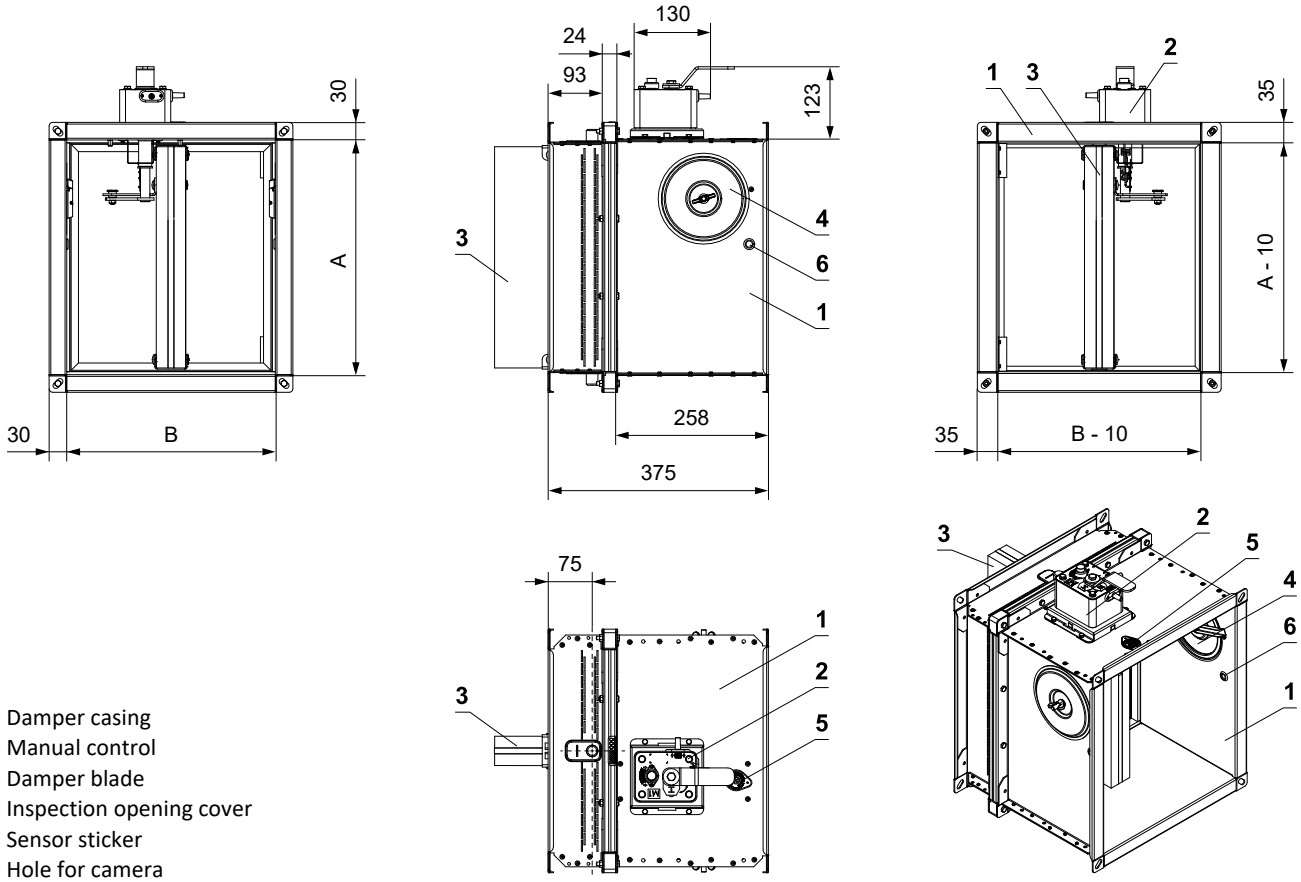

1 Damper casing
2 Manual control
3 Damper blade
4 Inspection opening cover
5 Sensor sticker
6 Hole for camera

FDMQ 120 with spring return actuator

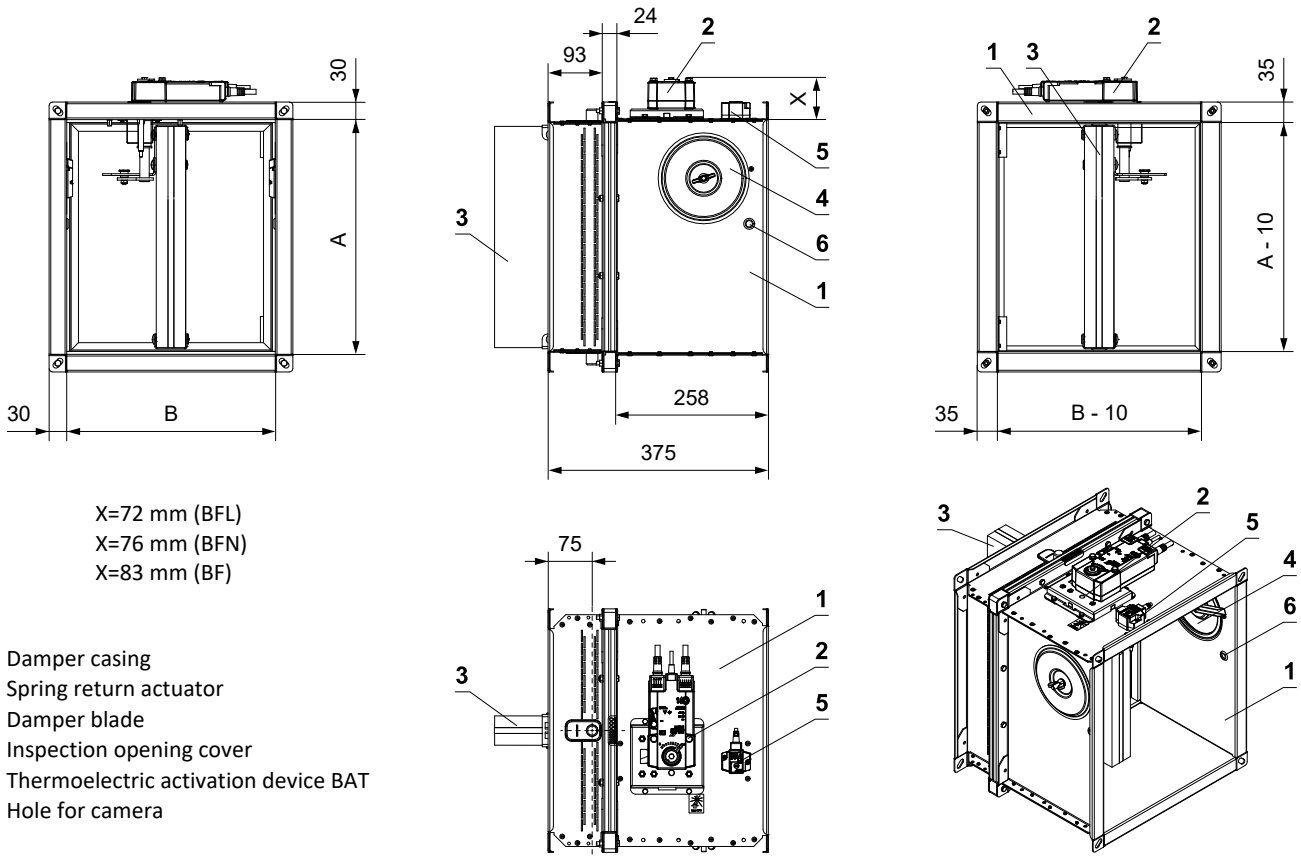

X=72 mm (BFL)
X=76 mm (BFN)
X=83 mm (BF)

1 Damper casing
2 Spring return actuator
3 Damper blade
4 Inspection opening cover
5 Thermoelectric activation device BAT
6 Hole for camera

Damper blade overlaps

- Open damper blade overlaps the damper casing by the value “a” or “c”. These values are specified in chapter Technical parameters → see pages 16 to 21

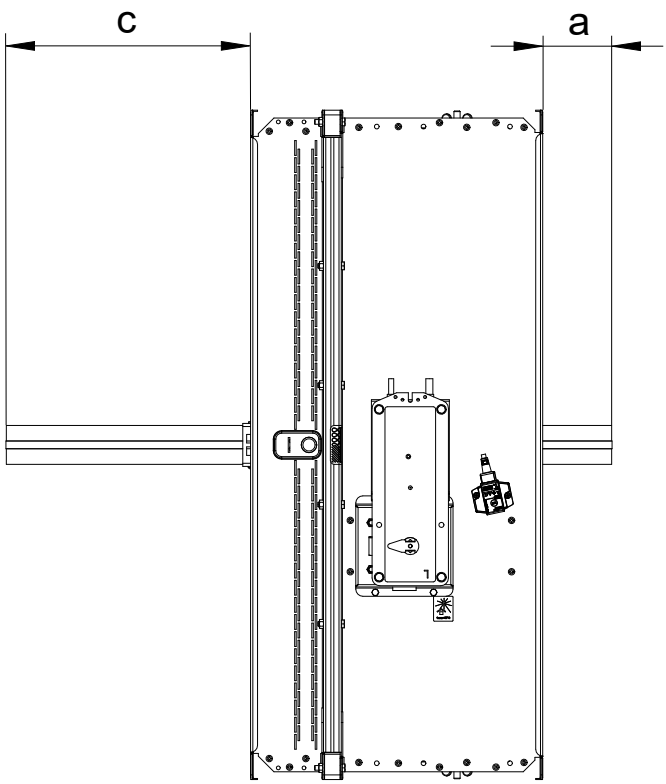

Values "a" and "c" has to be respected when projecting following air-conditioning duct.

Flange of a damper - CONTROL SIDE

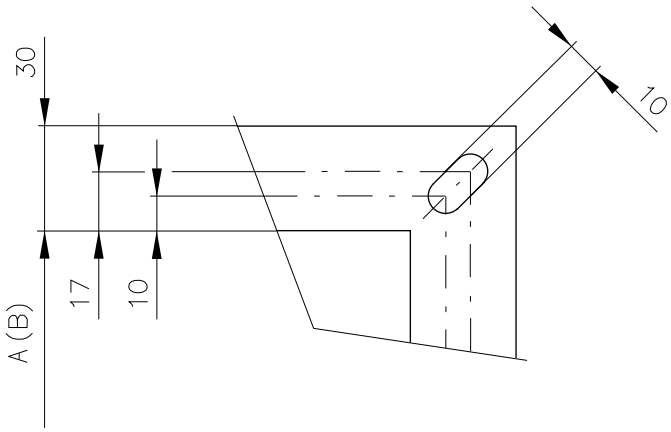

Flange of a damper - INSTALLATION SIDE

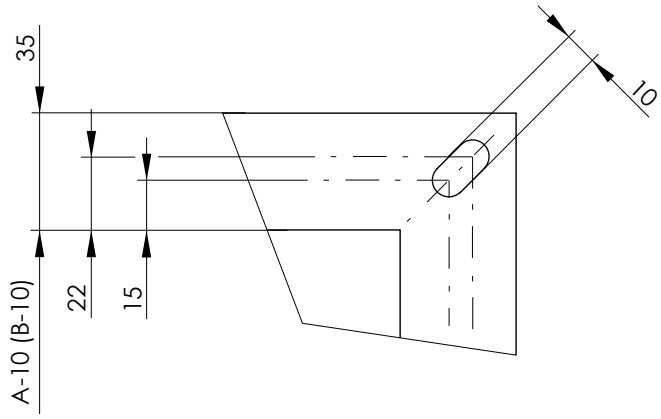

Flanges of dampers are 30 mm wide with oval hole.

Technical parameters

A x B [mm]		Damper blades overlaps a [mm]	Damper blades overlaps c [mm]	Weight Man. [kg]	Weight Actu. [kg]*	Free area S_f [m²]	Spring return actuator	Manual control
150 x	150	-	-	8,4	8,5	0,0094	BFL	M2
	180	-	13	8,8	8,9	0,0131		
	200	-	23	9	9,2	0,0156		
	225	-	35,5	9,4	9,5	0,0188		
	250	-	48	9,7	9,8	0,0219		
	280	-	63	10,1	10,2	0,0256		
	300	-	73	10,4	10,5	0,0281		
	315	-	80,5	10,6	10,7	0,0300		
	355	-	100,5	11,1	11,2	0,0350		
	400	-	123	11,7	11,8	0,0406		
	450	-	148	12,3	12,5	0,0469		
	500	-	173	13	13,2	0,0531		
	550	-	198	13,6	13,8	0,0594		
	560	-	203	13,8	14	0,0606		
	600	-	223	14,3	14,5	0,0656		
	630	-	238	14,7	14,9	0,0694		
180 x	150	-	-	8,8	8,9	0,0116	BFL	M2
	180	-	13	9,2	9,4	0,0163		
	200	-	23	9,6	9,7	0,0194		
	225	-	36	10	10,1	0,0233		
	250	-	48	10,4	10,5	0,0271		
	280	-	63	10,8	11	0,0318		
	300	-	73	11,1	11,3	0,0349		
	315	-	80,5	11,4	11,6	0,0372		
	355	-	100,5	12	12,2	0,0434		
	400	-	123	12,7	12,9	0,0504		
	450	-	148	13,5	13,7	0,0581		
	500	-	173	14,3	14,5	0,0659		
	550	-	198	15,1	15,3	0,0736		
	560	-	203	15,2	15,5	0,0752		
	600	-	223	15,8	16,1	0,0814		
	630	-	238	16,3	16,5	0,0860		
	650	3	248	16,6	16,9	0,0891		
	700	28	273	17,4	17,6	0,0969	BFN	
	710	33	278	17,5	17,8	0,0984		
	750	53	298	18,1	18,4	0,1046		
	800	78	323	18,9	19,2	0,1124		
200 x	150	-	-	9	9,2	0,0131	BFL	M2
	180	-	13	9,6	9,7	0,0184		
	200	-	23	9,9	10,1	0,0219		
	225	-	36	10,4	10,5	0,0263		
	250	-	48	10,8	11	0,0306		
	280	-	63	11,3	11,5	0,0359		
	300	-	73	11,7	11,8	0,0394		
	315	-	80,5	11,9	12,1	0,0420		
	355	-	100,5	12,6	12,8	0,0490		
	400	-	123	13,4	13,6	0,0569		
	450	-	148	14,3	14,5	0,0656		
	500	-	173	15,2	15,4	0,0744		
	550	-	198	16	16,3	0,0831		
	560	-	203	16,2	16,4	0,0849		
	600	-	223	16,9	17,1	0,0919		
	630	-	238	17,4	17,6	0,0971		
200 x	650	3	248	17,7	18	0,1006	BFL	M2
	700	28	273	18,6	18,8	0,1094	BFN	
	710	33	278	18,7	19	0,1111		
	750	53	298	19,4	19,7	0,1181		
	800	78	323	20,2	20,5	0,1269		
225 x	150	-	-	9,4	9,5	0,0150	BFL	M2
	180	-	13	10	10,1	0,0210		
	200	-	23	10,4	10,5	0,0250		
	225	-	36	10,9	11	0,0300		
	250	-	48	11,3	11,5	0,0350		
	280	-	63	11,9	12,1	0,0410		
	300	-	73	12,3	12,5	0,0450		
	315	-	80,5	12,6	12,8	0,0480		
	355	-	100,5	13,4	13,6	0,0560		
	400	-	123	14,3	14,5	0,0650		
	450	-	148	15,3	15,5	0,0750		
	500	-	173	16,2	16,5	0,0850		
	550	-	198	17,2	17,4	0,0950		
	560	-	203	17,4	17,6	0,0970		
	600	-	223	18,1	18,4	0,1050		
	630	-	238	18,7	19	0,1110	BFN	
	650	3	248	19,1	19,4	0,1150		
	700	28	273	20	20,3	0,1250		
	710	33	278	20,2	20,5	0,1270		
	750	53	298	21	21,3	0,1350		
	800	78	323	21,9	22,2	0,1450		
250 x	150	-	-	9,7	9,8	0,0169	BFL	M2
	180	-	13	10,4	10,5	0,0236		
	200	-	23	10,8	11	0,0281		
	225	-	36	11,3	11,5	0,0338		
	250	-	48	11,9	12,1	0,0394		
	280	-	63	12,6	12,7	0,0461		
	300	-	73	13	13,2	0,0506		
	315	-	80,5	13,3	13,5	0,0540		
	355	-	100,5	14,2	14,4	0,0630		
	400	-	123	15,2	15,4	0,0731		
	450	-	148	16,2	16,5	0,0844		
	500	-	173	17,3	17,6	0,0956		
	550	-	198	18,3	18,6	0,1069		
	560	-	203	18,6	18,8	0,1091		
	600	-	223	19,4	19,7	0,1181	BFN	
	630	-	238	20	20,3	0,1249		
	650	3	248	20,4	20,8	0,1294		
	700	28	273	21,5	21,8	0,1406		
	710	33	278	21,7	22	0,1429		
	750	53	298	22,5	22,9	0,1519		M3
	800	78	323	23,5	23,9	0,1631		
280 x	150	-	-	10,1	10,2	0,0191	BFL	M2
	180	-	13	10,8	11	0,0268		
	200	-	23	11,3	11,5	0,0319		
	225	-	36	11,9	12,1	0,0383		
	250	-	48	12,6	12,7	0,0446		
	280	-	63	13,3	13,5	0,0523		

Sizes in increments of 5 mm can be manufactured on request.

* *For designs with BKN a weight of 0.5 kg must be added.*

A x B [mm]		Damper blades overlaps a [mm]	Damper blades overlaps c [mm]	Weight Man. [kg]	Weight Actu. [kg]*	Free area S_f [m²]	Spring return actuator	Manual control
280 x	300	-	73	13,8	14	0,0574	BFL	M2
	315	-	80,5	14,1	14,3	0,0612		
	355	-	100,5	15,1	15,3	0,0714		
	400	-	123	16,2	16,4	0,0829		
	450	-	148	17,4	17,6	0,0956		
	500	-	173	18,6	18,8	0,1084		
	550	-	198	19,7	20	0,1211		
	560	-	203	20	20,3	0,1237	BFN	
	600	-	223	20,9	21,2	0,1339		
	630	-	238	21,6	21,9	0,1415		
	650	3	248	22	22,4	0,1466		
	700	28	273	23,2	23,6	0,1594		
	710	33	278	23,4	23,8	0,1619		
	750	53	298	24,3	24,7	0,1721		M3
	800	78	323	25,5	25,9	0,1849		
300 x	150	-	-	10,4	10,5	0,0206	BFL	M2
	180	-	13	11,1	11,3	0,0289		
	200	-	23	11,7	11,8	0,0344		
	225	-	36	12,3	12,5	0,0413		
	250	-	48	13	13,2	0,0481		
	280	-	63	13,8	14	0,0564		
	300	-	73	14,3	14,5	0,0619		
	315	-	80,5	14,7	14,9	0,0660		
	355	-	100,5	15,7	15,9	0,0770		
	400	-	123	16,9	17,1	0,0894		
	450	-	148	18,1	18,4	0,1031		
	500	-	173	19,4	19,7	0,1169		
	550	-	198	20,6	21	0,1306	BFN	
	560	-	203	20,9	21,2	0,1334		
	600	-	223	21,9	22,2	0,1444		
	630	-	238	22,6	23	0,1526		
	650	3	248	23,1	23,5	0,1581		
	700	28	273	24,3	24,7	0,1719		
	710	33	278	24,6	25	0,1746		
	750	53	298	25,5	26	0,1856		M3
	800	78	323	26,7	27,2	0,1994		
315 x	150	-	-	10,6	10,7	0,0218	BFL	M2
	180	-	13	11,4	11,6	0,0305		
	200	-	23	11,9	12,1	0,0363		
	225	-	36	12,6	12,8	0,0435		
	250	-	48	13,3	13,5	0,0508		
	280	-	63	14,1	14,3	0,0595		
	300	-	73	14,7	14,9	0,0653		
	315	-	80,5	15,1	15,3	0,0696		
	355	-	100,5	16,2	16,4	0,0812		
	400	-	123	17,4	17,6	0,0943		
	450	-	148	18,7	19	0,1088		
	500	-	173	20	20,3	0,1233		
	550	-	198	21,3	21,7	0,1378	BFN	
	560	-	203	21,6	21,9	0,1407		
	600	-	223	24,1	24,5	0,1680		
	630	-	238	23,4	23,8	0,1610		
	650	3	248	23,9	24,3	0,1668		
	700	28	273	25,2	25,6	0,1813		

A x B [mm]		Damper blades overlaps a [mm]	Damper blades overlaps c [mm]	Weight Man. [kg]	Weight Actu. [kg]*	Free area S_f [m²]	Spring return actuator	Manual control
315 x	710	33	278	25,4	25,8	0,1842	BFN	M2
	750	53	298	26,4	26,9	0,1958		M3
	800	78	323	27,7	28,1	0,2103		
355 x	150	-	-	11,1	11,2	0,0248	BFL	M2
	180	-	13	12	12,2	0,0347		
	200	-	23	12,6	12,8	0,0413		
	225	-	36	13,4	13,6	0,0495		
	250	-	48	14,2	14,4	0,0578		
	280	-	63	15,1	15,3	0,0677		
	300	-	73	15,7	15,9	0,0743		
	315	-	80,5	16,2	16,4	0,0792		
	355	-	100,5	17,4	17,6	0,0924		
	400	-	123	18,7	19	0,1073		
	450	-	148	20,2	20,5	0,1238		
	500	-	173	21,7	22	0,1403	BFN	
	550	-	198	23,1	23,5	0,1568		
	560	-	203	23,4	23,8	0,1601		
	600	-	223	24,6	25	0,1733		
	630	-	238	25,4	25,8	0,1832		
	650	3	248	26	26,4	0,1898		
	700	28	273	27,4	27,9	0,2063		
	710	33	278	27,7	28,1	0,2096		
	750	53	298	28,8	29,3	0,2228		M3
	800	78	323	30,2	30,7	0,2393	BF	
400 x	150	-	-	11,7	11,8	0,0281	BFL	M2
	180	-	13	12,7	12,9	0,0394		
	200	-	23	13,4	13,6	0,0469		
	225	-	36	14,3	14,5	0,0563		
	250	-	48	15,2	15,4	0,0656		
	280	-	63	16,2	16,4	0,0769		
	300	-	73	16,9	17,1	0,0844		
	315	-	80,5	17,4	17,6	0,0900		
	355	-	100,5	18,7	19	0,1050		
	400	-	123	20,2	20,5	0,1219		
	450	-	148	21,9	22,2	0,1406		
	500	-	173	23,5	23,9	0,1594	BFN	
	550	-	198	25,1	25,5	0,1781		
	560	-	203	25,5	25,9	0,1819		
	600	-	223	26,7	27,2	0,1969		
	630	-	238	27,7	28,1	0,2081		
	650	3	248	28,3	28,8	0,2156		
	700	28	273	29,9	30,4	0,2344		
	710	33	278	30,2	30,7	0,2381		
	750	53	298	31,4	32	0,2531	BF	M3
	800	78	323	32,9	33,5	0,2719		
450 x	150	-	-	12,3	12,5	0,0319	BFL	M2
	180	-	13	13,5	13,7	0,0446		
	200	-	23	14,3	14,5	0,0531		
	225	-	36	15,3	15,5	0,0638		
	250	-	48	16,2	16,5	0,0744		
	280	-	63	17,4	17,6	0,0871		
	300	-	73	18,1	18,4	0,0956		
	315	-	80,5	18,7	19	0,1020		
	355	-	100,5	20,2	20,5	0,1190		

Sizes in increments of 5 mm can be manufactured on request.

* *For designs with BKN a weight of 0.5 kg must be added.*

A x B [mm]		Damper blades overlaps a [mm]	Damper blades overlaps c [mm]	Weight Man. [kg]	Weight Actu. [kg]*	Free area S_f[m²]	Spring return actuator	Manual control
450 x	400	-	123	21,9	22,2	0,1381	BFL	M2
	450	-	148	23,7	24,1	0,1594	BFN	
	500	-	173	25,5	26	0,1806		
	550	-	198	27,3	27,8	0,2019		
	560	-	203	27,7	28,1	0,2061		
	600	-	223	29,1	29,6	0,2231		
	630	-	238	30,1	30,7	0,2359		
	650	3	248	30,8	31,4	0,2444		
	700	28	273	32,6	33,1	0,2656	BF	
	710	33	278	32,9	33,5	0,2699		
	750	53	298	34,3	34,9	0,2869		M3
	800	78	323	35,9	36,6	0,3081		
500 x	150	-	-	13	13,2	0,0356	BFL	M2
	180	-	13	14,3	14,5	0,0499		
	200	-	23	15,2	15,4	0,0594		
	225	-	36	16,2	16,5	0,0713		
	250	-	48	17,3	17,6	0,0831		
	280	-	63	18,6	18,8	0,0974		
	300	-	73	19,4	19,7	0,1069		
	315	-	80,5	20	20,3	0,1140		
	355	-	100,5	21,7	22	0,1330		
	400	-	123	23,5	23,9	0,1544		
	450	-	148	25,5	26	0,1781	BFN	
	500	-	173	27,5	28	0,2019		
	550	-	198	29,5	30	0,2256	BFN	
	560	-	203	29,9	30,4	0,2304		
	600	-	223	31,4	32	0,2494		
	630	-	238	32,6	33,1	0,2636		
	650	3	248	33,3	33,9	0,2731	BF	
	700	28	273	35,2	35,8	0,2969		
	710	33	278	35,6	36,2	0,3016		
	750	53	298	37	37,7	0,3206		M3
	800	78	323	38,9	39,6	0,3444		
550 x	150	-	-	13,6	13,8	0,0394	BFL	M2
	180	-	13	15,1	15,3	0,0551		
	200	-	23	16	16,3	0,0656		
	225	-	36	17,2	17,4	0,0788		
	250	-	48	18,3	18,6	0,0919		
	280	-	63	19,7	20	0,1076		
	300	-	73	20,6	21	0,1181		
	315	-	80,5	21,3	21,7	0,1260		
	355	-	100,5	23,1	23,5	0,1470		
	400	-	123	25,1	25,5	0,1706	BFN	
	450	-	148	27,3	27,8	0,1969		
	500	-	173	29,5	30	0,2231		
	550	-	198	31,6	32,2	0,2494		
	560	-	203	32	32,6	0,2546		
	600	-	223	33,7	34,3	0,2756		
	630	-	238	34,9	35,5	0,2914	BF	
	650	3	248	35,7	36,4	0,3019		
	700	28	273	37,8	38,4	0,3281		
	710	33	278	38,2	38,9	0,3334		
	750	53	298	39,8	40,5	0,3544		M3
	800	78	323	41,7	42,5	0,3806		

A x B [mm]		Damper blades overlaps a [mm]	Damper blades overlaps c [mm]	Weight Man. [kg]	Weight Actu. [kg]*	Free area S_f [m²]	Spring return actuator	Manual control
560 x	150	-	-	13,8	14	0,0401	BFL	M2
	180	-	13	15,2	15,5	0,0562		
	200	-	23	16,2	16,4	0,0669		
	225	-	36	17,4	17,6	0,0803		
	250	-	48	18,6	18,8	0,0936		
	280	-	63	20	20,3	0,1097		
	300	-	73	20,9	21,2	0,1204		
	315	-	80,5	21,6	21,9	0,1284		
	355	-	100,5	23,4	23,8	0,1498		
	400	-	123	25,5	25,9	0,1739	BFN	
	450	-	148	27,7	28,1	0,2006		
	500	-	173	29,9	30,4	0,2274		
	550	-	198	32	32,6	0,2541		
	560	-	203	32,5	33	0,2595		
	600	-	223	34,1	34,7	0,2809		
	630	-	238	35,4	36	0,2969	BF	
	650	3	248	36,2	36,9	0,3076		
	700	28	273	38,3	39	0,3344		
	710	33	278	38,7	39,4	0,3397		
	750	53	298	40,3	41	0,3611		M3
	800	78	323	42,3	43	0,3879		
600 x	150	-	-	14,3	14,5	0,0431	BFL	M2
	180	-	13	15,8	16,1	0,0604		
	200	-	23	16,9	17,1	0,0719		
	225	-	36	18,1	18,4	0,0863		
	250	-	48	19,4	19,7	0,1006		
	280	-	63	20,9	21,2	0,1179		
	300	-	73	21,9	22,2	0,1294		
	315	-	80,5	22,6	23	0,1380		
	355	-	100,5	24,6	25	0,1610		
	400	-	123	26,7	27,2	0,1869	BFN	
	450	-	148	29,1	29,6	0,2156		
	500	-	173	31,4	32	0,2444		
	550	-	198	33,7	34,3	0,2731		
	560	-	203	34,1	34,7	0,2789		
	600	-	223	35,9	36,6	0,3019	BF	
	630	-	238	37,3	37,9	0,3191		
	650	3	248	38,1	38,8	0,3306		
	700	28	273	40,3	41	0,3594		
	710	33	278	40,7	41,5	0,3651		
	750	53	298	42,4	43,2	0,3881		M3
	800	78	323	44,5	45,3	0,4169		
630 x	150	-	-	14,7	14,9	0,0454	BFL	M2
	180	-	13	16,3	16,5	0,0635		
	200	-	23	17,4	17,6	0,0756		
	225	-	36	18,7	19	0,0908		
	250	-	48	20	20,3	0,1059		
	280	-	63	21,6	21,9	0,1240		
	300	-	73	22,6	23	0,1361		
	315	-	80,5	23,4	23,8	0,1452		
	355	-	100,5	25,4	25,8	0,1694		
	400	-	123	27,7	28,1	0,1966	BFN	
	450	-	148	30,1	30,7	0,2269		
	500	-	173	32,6	33,1	0,2571		

Sizes in increments of 5 mm can be manufactured on request.

* *For designs with BKN a weight of 0.5 kg must be added.*

A x B [mm]		Damper blades overlaps a [mm]	Damper blades overlaps c [mm]	Weight Man. [kg]	Weight Actu. [kg]*	Free area S_f [m²]	Spring return actuator	Manual control
630 x	550	-	198	34,9	35,5	0,2874	BFN	M2
	560	-	203	35,4	36	0,2934		
	600	-	223	37,3	37,9	0,3176	BF	
	630	-	238	38,6	39,3	0,3358		
	650	3	248	39,5	40,3	0,3479		
	700	28	273	41,8	42,5	0,3781		
	710	33	278	42,2	43	0,3842		
	750	53	298	44	44,8	0,4084		M3
	800	78	323	46,1	47	0,4386		M4
650 x	150	-	-	14,9	15,2	0,0469	BFL	M2
	180	-	13	16,6	16,9	0,0656		
	200	-	23	17,7	18	0,0781		
	225	-	36	19,1	19,4	0,0938		
	250	-	48	20,4	20,8	0,1094		
	280	-	63	22	22,4	0,1281		
	300	-	73	23,1	23,5	0,1406		
	315	-	80,5	23,9	24,3	0,1500		
	355	-	100,5	26	26,4	0,1750		
	400	-	123	28,3	28,8	0,2031	BFN	
	450	-	148	30,8	31,4	0,2344		
	500	-	173	33,3	33,9	0,2656		
	550	-	198	35,7	36,4	0,2969		
	560	-	203	36,2	36,9	0,3031	BF	
	600	-	223	38,1	38,8	0,3281		
	630	-	238	39,5	40,3	0,3469		
	650	3	248	40,5	41,2	0,3594		
	700	28	273	42,7	43,5	0,3906		
	710	33	278	43,2	44	0,3969		
	750	53	298	45	45,8	0,4219		M3
	800	78	323	47,2	48,1	0,4531		M4
700 x	150	-	-	15,6	15,8	0,0506	BFL	M2
	180	-	13	17,4	17,6	0,0709		
	200	-	23	18,6	18,8	0,0844		
	225	-	36	20	20,3	0,1013		
	250	-	48	21,5	21,8	0,1181		
	280	-	63	23,2	23,6	0,1384		
	300	-	73	24,3	24,7	0,1519		
	315	-	80,5	25,2	25,6	0,1620		
	355	-	100,5	27,4	27,9	0,1890	BFN	
	400	-	123	29,9	30,4	0,2194		
	450	-	148	32,6	33,1	0,2531		
	500	-	173	35,2	35,8	0,2869		
	550	-	198	37,8	38,4	0,3206	BF	
	560	-	203	38,3	39	0,3274		
	600	-	223	40,3	41	0,3544		
	630	-	238	41,8	42,5	0,3746		
	650	3	248	42,7	43,5	0,3881		
	700	28	273	45,2	46	0,4219		
	710	33	278	45,6	46,5	0,4286		
	750	53	298	47,5	48,4	0,4556		M3
	800	78	323	49,8	50,8	0,4894		M4
710 x	150	-	-	15,7	15,9	0,0514	BFL	M2
	180	-	13	17,5	17,8	0,0719		
	200	-	23	18,7	19	0,0856		

A x B [mm]		Damper blades overlaps a [mm]	Damper blades overlaps c [mm]	Weight Man. [kg]	Weight Actu. [kg]*	Free area S_f [m²]	Spring return actuator	Manual control
710 x	225	-	36	20,2	20,5	0,1028	BFL	M2
	250	-	48	21,7	22	0,1199		
	280	-	63	23,4	23,8	0,1404		
	300	-	73	24,6	25	0,1541		
	315	-	80,5	25,4	25,8	0,1644		
	355	-	100,5	27,7	28,1	0,1918	BFN	
	400	-	123	30,2	30,7	0,2226		
	450	-	148	32,9	33,5	0,2569		
	500	-	173	35,6	36,2	0,2911		
	550	-	198	38,2	38,9	0,3254	BF	
	560	-	203	38,7	39,4	0,3322		
	600	-	223	40,7	41,5	0,3596		
	630	-	238	42,2	43	0,3802		
	650	3	248	43,2	44	0,3939		
	700	28	273	45,6	46,5	0,4281		
	710	33	278	46,1	47	0,4350		M3
	750	53	298	48	48,9	0,4624		
	800	78	323	50,3	51,3	0,4966		M4
750 x	150	-	-	16,2	16,5	0,0544	BFL	M2
	180	-	13	18,1	18,4	0,0761		
	200	-	23	19,4	19,7	0,0906		
	225	-	36	21	21,3	0,1088		
	250	-	48	22,5	22,9	0,1269		
	280	-	63	24,3	24,7	0,1486		
	300	-	73	25,5	26	0,1631		
	315	-	80,5	26,4	26,9	0,1740		
	355	-	100,5	28,8	29,3	0,2030	BFN	
	400	-	123	31,4	32	0,2356		
	450	-	148	34,3	34,9	0,2719		
	500	-	173	37	37,7	0,3081		
	550	-	198	39,8	40,5	0,3444	BF	
	560	-	203	40,3	41	0,3516		
	600	-	223	42,4	43,2	0,3806		
	630	-	238	44	44,8	0,4024		
	650	3	248	45	45,8	0,4169		
	700	28	273	47,5	48,4	0,4531		
	710	33	278	48	48,9	0,4604		M3
	750	53	298	50	51	0,4894		
	800	78	323	52,3	53,4	0,5256		M4
800 x	150	-	-	16,9	17,1	0,0581	BFL	M2
	180	-	13	18,9	19,2	0,0814		
	200	-	23	20,2	20,5	0,0969		
	225	-	36	21,9	22,2	0,1163		
	250	-	48	23,5	23,9	0,1356		
	280	-	63	25,5	25,9	0,1589		
	300	-	73	26,7	27,2	0,1744		
	315	-	80,5	27,7	28,1	0,1860		
	355	-	100,5	30,2	30,7	0,2170	BFN	
	400	-	123	32,9	33,5	0,2519		
	450	-	148	35,9	36,6	0,2906		
	500	-	173	38,9	39,6	0,3294		
	550	-	198	41,7	42,5	0,3681	BF	
	560	-	203	42,3	43	0,3759		
	600	-	223	44,5	45,3	0,4069		

Sizes in increments of 5 mm can be manufactured on request.

* *For designs with BKN a weight of 0.5 kg must be added.*

A x B [mm]		Damper blades overlaps a [mm]	Damper blades overlaps c [mm]	Weight Man. [kg]	Weight Actu. [kg]*	Free area S_f [m²]	Spring return actuator	Manual control
800 x	630	-	238	46,1	47	0,4301	BF	M3
	650	3	248	47,2	48,1	0,4456		
	700	28	273	49,8	50,8	0,4844		
	710	33	278	50,3	51,3	0,4921		
	750	53	298	52,3	53,4	0,5231		
	800	78	323	54,8	56	0,5619		M4
900 x	150	-	-	18,1	18,4	0,0656	BFL	M2
	180	-	13	20,4	20,7	0,0919		
	200	-	23	21,9	22,2	0,1094		
	225	-	36	23,7	24,1	0,1313		
	250	-	48	25,5	26	0,1531		
	280	-	63	27,7	28,1	0,1794		
	300	-	73	29,1	29,6	0,1969		
	315	-	80,5	30,1	30,7	0,2100	BFN	
	355	-	100,5	32,9	33,5	0,2450		
	400	-	123	35,9	36,6	0,2844		
	450	-	148	39,2	39,9	0,3281		
	500	-	173	42,4	43,2	0,3719	BF	
	550	-	198	45,5	46,4	0,4156		
	560	-	203	46,1	47	0,4244		M3
	600	-	223	48,5	49,4	0,4594		
	630	-	238	50,2	51,2	0,4856		
	650	3	248	51,4	52,4	0,5031		
	700	28	273	54,2	55,3	0,5469		
	710	33	278	54,8	55,9	0,5556		
	750	53	298	56,9	58,1	0,5906		
	800	78	323	59,6	60,8	0,6344		M4
1000 x	150	-	-	19,4	19,7	0,0731	BFL	M2
	180	-	13	21,9	22,2	0,1024		
	200	-	23	23,5	23,9	0,1219		
	225	-	36	25,5	26	0,1463		
	250	-	48	27,5	28	0,1706		
	280	-	63	29,9	30,4	0,1999		
	300	-	73	31,4	32	0,2194	BFN	
	315	-	80,5	32,6	33,1	0,2340		
	355	-	100,5	35,6	36,2	0,2730		
	400	-	123	38,9	39,6	0,3169		
	450	-	148	42,4	43,2	0,3656		
	500	-	173	45,8	46,7	0,4144	BF	
	550	-	198	49,1	50,1	0,4631		M3
	560	-	203	49,8	50,8	0,4729		
	600	-	223	52,3	53,4	0,5119		
	630	-	238	54,2	55,3	0,5411		
	650	3	248	55,4	56,6	0,5606		
	700	28	273	58,4	59,7	0,6094		
	710	33	278	59	60,3	0,6191		
	750	53	298	61,2	62,6	0,6581		
	800	78	323	64	65,4	0,7069		M4
1100 x	180	-	13	23,4	23,7	0,1129	BFL	M2
	200	-	23	25,1	25,5	0,1344		
	225	-	36	27,3	27,8	0,1613		
	250	-	48	29,5	30	0,1881		
	280	-	63	32	32,6	0,2204		
	300	-	73	33,7	34,3	0,2419	BFN	
1100 x	315	-	80,5	34,9	35,5	0,2580	BFN	M2
	355	-	100,5	38,2	38,9	0,3010		
	400	-	123	41,7	42,5	0,3494		
	450	-	148	45,5	46,4	0,4031	BF	
	500	-	173	49,1	50,1	0,4569		
	550	-	198	52,7	53,7	0,5106		
	560	-	203	53,3	54,4	0,5214		M3
	600	-	223	56	57,2	0,5644		
	630	-	238	58	59,2	0,5966		
	650	3	248	59,3	60,5	0,6181		
	700	28	273	62,4	63,8	0,6719		
	710	33	278	63	64,4	0,6826		
	750	53	298	65,3	66,8	0,7256		
	800	78	323	68,1	69,7	0,7794		M4
1250 x	180	-	13	25,5	26	0,1286	BFL	M2
	200	-	23	27,5	28	0,1531		
	225	-	36	30	30,5	0,1838		
	250	-	48	32,4	32,9	0,2144		
	280	-	63	35,2	35,8	0,2511	BFN	
	300	-	73	37	37,7	0,2756		
	315	-	80,5	38,4	39,1	0,2940		
	355	-	100,5	42	42,7	0,3430		
	400	-	123	45,8	46,7	0,3981		
	450	-	148	50	51	0,4594	BF	M3
	500	-	173	53,9	55	0,5206		
	550	-	198	57,7	58,9	0,5819		
	560	-	203	58,4	59,7	0,5941		
	600	-	223	61,2	62,6	0,6431		
	630	-	238	63,3	64,7	0,6799		
	650	3	248	64,7	66,1	0,7044		
	700	28	273	67,9	69,5	0,7656		M4
	710	33	278	68,5	70,1	0,7779		
	750	53	298	70,9	72,7	0,8269		M5
	800	78	323	73,8	75,7	0,8881		
1400 x	180	-	13	27,7	28,1	0,1444	BFL	M2
	200	-	23	29,9	30,4	0,1719		
	225	-	36	32,6	33,1	0,2063		
	250	-	48	35,2	35,8	0,2406	BFN	
	280	-	63	38,3	39	0,2819		
	300	-	73	40,3	41	0,3094		
	315	-	80,5	41,8	42,5	0,3300		
	355	-	100,5	45,6	46,5	0,3850		
	400	-	123	49,8	50,8	0,4469	BF	M3
	450	-	148	54,2	55,3	0,5156		
	500	-	173	58,4	59,7	0,5844		
	550	-	198	62,4	63,8	0,6531		
	560	-	203	63,1	64,5	0,6669		
	600	-	223	66,1	67,6	0,7219		
	630	-	238	68,2	69,8	0,7631		M4
	650	3	248	69,6	71,3	0,7906		
	700	28	273	72,9	74,7	0,8594		M5
	710	33	278	73,5	75,4	0,8731		
	750	53	298	75,9	77,9	0,9281		
	800	78	323	78,8	80,9	0,9969		

Sizes in increments of 5 mm can be manufactured on request.

* *For designs with BKN a weight of 0.5 kg must be added.*

A x B [mm]		Damper blades overlaps		Weight		Free area S_f [m²]	Spring return actuator	Manual control
		a [mm]	c [mm]	Man. [kg]	Actu. [kg]*			
1500 x	180	-	13	29,1	29,6	0,1549	BFL	M2
	200	-	23	31,4	32	0,1844		
	225	-	36	34,3	34,9	0,2213		
	250	-	48	37	37,7	0,2581	BFN	
	280	-	63	40,3	41	0,3024		
	300	-	73	42,4	43,2	0,3319		
	315	-	80,5	44	44,8	0,3540		
	355	-	100,5	48	48,9	0,4130		M3
	400	-	123	52,3	53,4	0,4794	BF	
	450	-	148	56,9	58,1	0,5531		

A x B [mm]		Damper blades overlaps		Weight		Free area S_f [m²]	Spring return actuator	Manual control
		a [mm]	c [mm]	Man. [kg]	Actu. [kg]*			
1500 x	500	-	173	61,2	62,6	0,6269	BF	M3
	550	-	198	65,3	66,8	0,7006		
	560	-	203	66,1	67,6	0,7154		
	600	-	223	69,1	70,8	0,7744		M4
	630	-	238	71,3	73	0,8186		M5
	650	3	248	72,7	74,5	0,8481		
	700	28	273	75,9	77,9	0,9219		
	710	33	278	76,6	78,6	0,9366		
	750	53	298	79	81,1	0,9956		
	800	78	323	81,7	84,1	1,0694		

Sizes in increments of 5 mm can be manufactured on request.

* *For designs with BKN a weight of 0.5 kg must be added.*

IV. INSTALLATION

Placement and installation

- The fire dampers are suitable for installation in arbitrary position in vertical and horizontal passages of fire separating constructions. The damper installation procedures must be done so that all load transfer from the fire separating constructions to the damper is absolutely excluded. Following air-conditioning duct must be suspended or supported so that all load transfer from the following duct to the fire damper is absolutely excluded. The gap between the installed damper and the fire separating construction must be perfectly filled with approved material.
- The damper must be installed so that the damper blade (in closed position) is situated in the fire separating construction - marked by the label BUILT-IN EDGE on the damper casing. If such solution is not possible, the duct between the fire separating construction and the damper blade must be protected according to the certified installation method → see pages 25 to 47
- During the installation and plastering process, the actuating mechanism must be protected (covered) against damage and pollution. The damper casing should not be deformed during bricking in. Once the damper is built in, the damper blade should not grind against the damper casing during opening or closing.
- The distance between the fire damper and the construction (wall, ceiling) must be 75 mm at the minimum, according to EN 1366-2. If two or more dampers are to be installed in one fire separating construction, the distance between adjacent dampers must be 200 mm at the minimum, according to EN 1366-2.

Minimum distance between the fire dampers and the construction

- minimum distance 200 mm between dampers, according to EN 1366-2
- minimum distance 75 mm between damper and construction (wall/ceiling), according to EN 1366-2
- recommended minimum distance 150 mm necessary for access to the actuator
- recommended minimum distance 250 mm necessary for access to the manual control

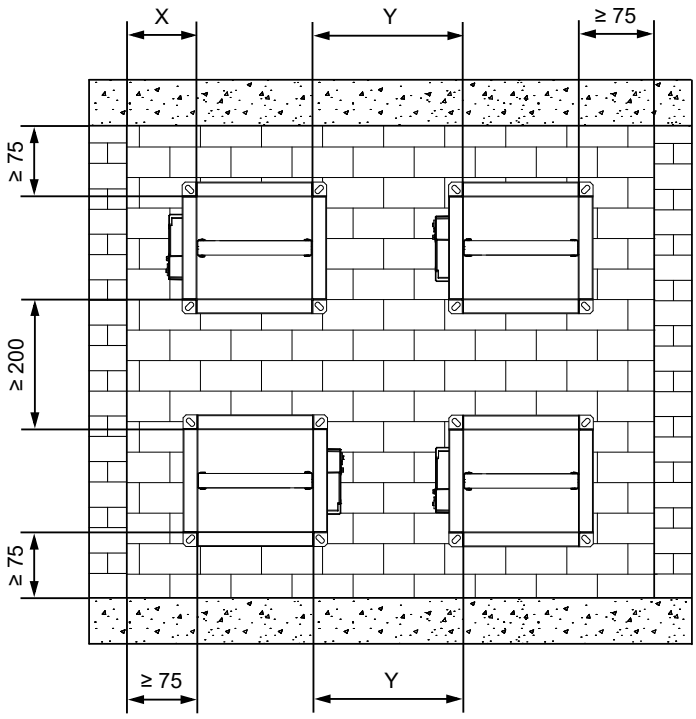

X = recommended min. distance for actuator ≥ 150 mm
X = recommended min. distance for manual control ≥ 250 mm

Y = min. distance for actuator ≥ 200 mm acc. to EN 1366-2
Y = recommended min. distance for manual control ≥ 250 mm

Built in edge

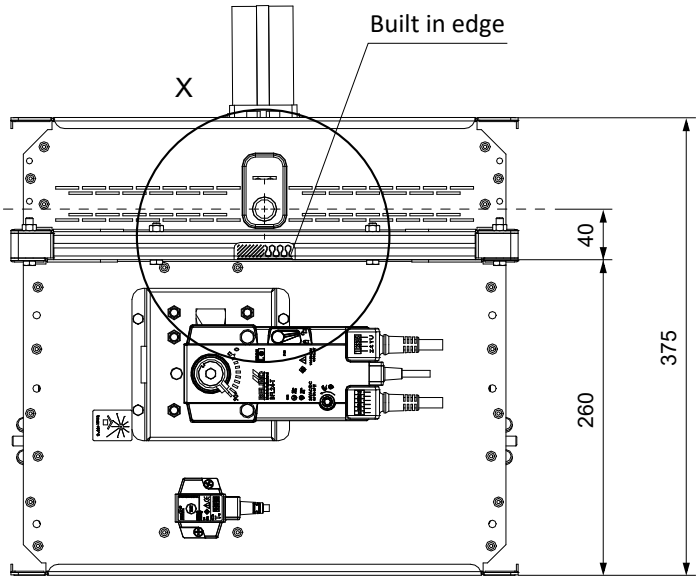

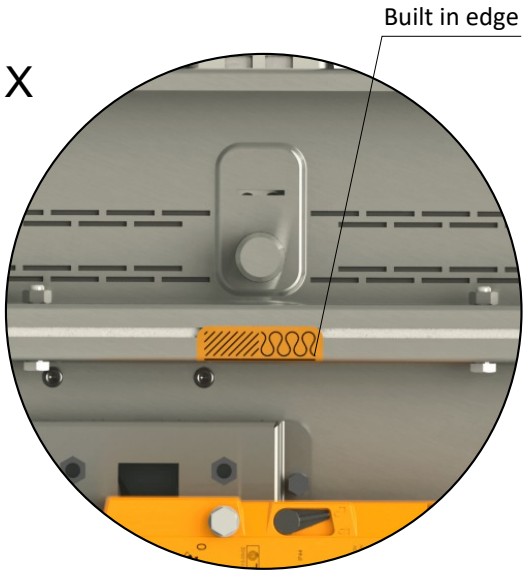

Dimensions of an installation opening

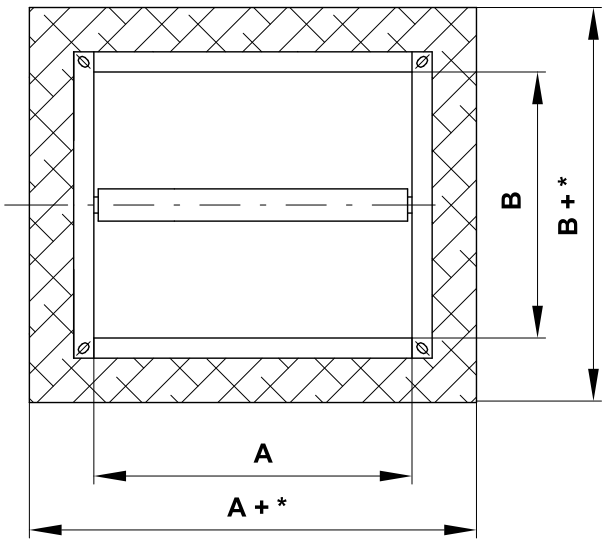

* **Mortar or gypsum**
- min. A(B)+100
- max. A(B)+300

* **Ablative Coated Batt, damper in solid/gypsum wall construction**
- min. A(B)+100
- max. A(B)+360

* **Ablative Coated Batt, damper outside solid/gypsum wall construction**
- A(B)+200

* **Ablative Coated Batt, damper in sandwich wall construction EUROCLAD**
- min. A(B)+100
- max. A(B)+400

* **Ablative Coated Batt, 2 dampers in one opening in shaft wall construction**
- min. A(B)+100
- max. A(B)+180

Statement of installations

Placement	wall/ceiling min. thickness [mm]	Method of installation	Fire resistance	Page
In solid wall construction	100	Mortar or gypsum	EI 120 (v_e) S [H] - 500 Pa	25
		2 dampers in battery - mortar or gypsum	EI 120 (v_e) S [H]	26
		4 dampers in battery - mortar or gypsum		27
		Ablative Coated Batt		28
Outside solid wall construction	100	ISOVER Ultimate Protect - Ablative Coated Batt	EI 120 (v_e) S [H]	29-30
		Flamebar EN Fire Duct - FPL 110 insulation		31-32
In gypsum wall construction	100	Mortar or gypsum	EI 120 (v_e) S [H] - 500 Pa	33
		2 dampers in battery - mortar or gypsum	EI 120 (v_e) S [H]	34
		4 dampers in battery - mortar or gypsum		35
		Ablative Coated Batt		36
Outside gypsum wall constrution	100	ISOVER Ultimate Protect - Ablative Coated Batt	EI 120 (v_e) S [H]	37-38
		Flamebar EN Fire Duct - FPL 110 insulation		39-40
In sandwich wall construction	150	Ablative Coated Batt with fire-resistant boards	EI 120 (v_e) S [H]	41
In shaft wall construction	105	Mortar or gypsum	EI 120 (v_e) S [H]	42
	107	2 dampers in one opening - mortar or gypsum	EI 120 (v_e) S [H]	43
		2 dampers in one opening - Ablative Coated Batt		44
In solid ceiling construction	150	Mortar or gypsum	EI 120 (h_o) S [H] - 500 Pa	45
		2 dampers in battery - mortar or gypsum	EI 120 (h_o) S [H]	46
		4 dampers in battery - mortar or gypsum		47

Installation in solid wall construction

In solid wall construction - mortar or gypsum

EI 120 (v_e) S [H] - 500 Pa

- For connection following duct → see page 52

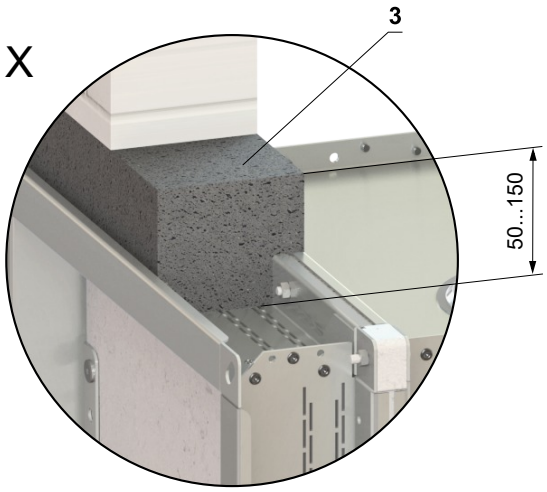

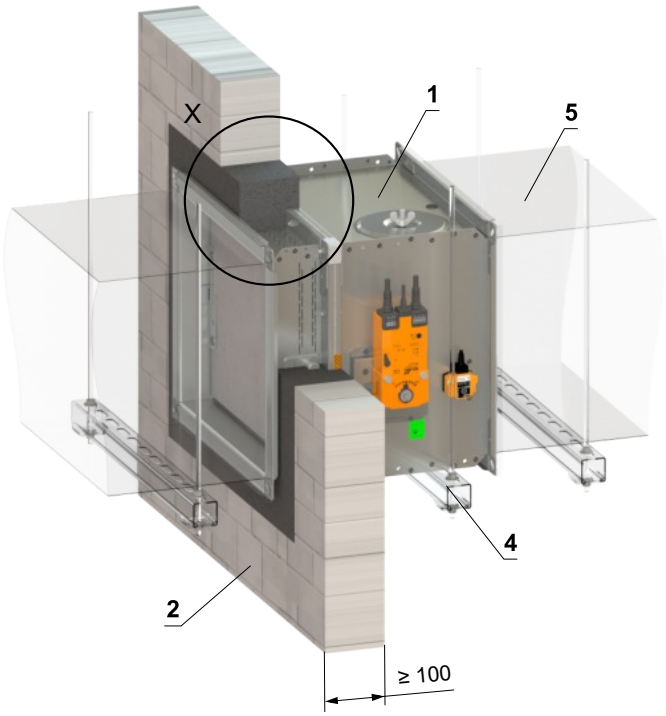

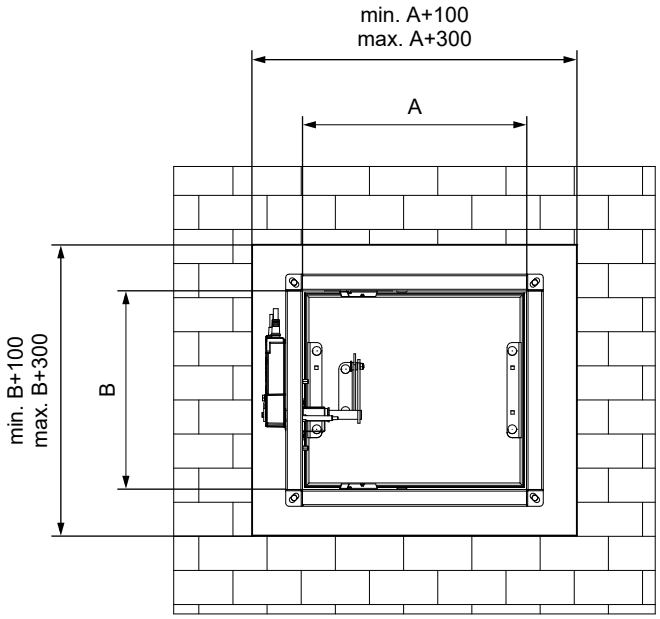

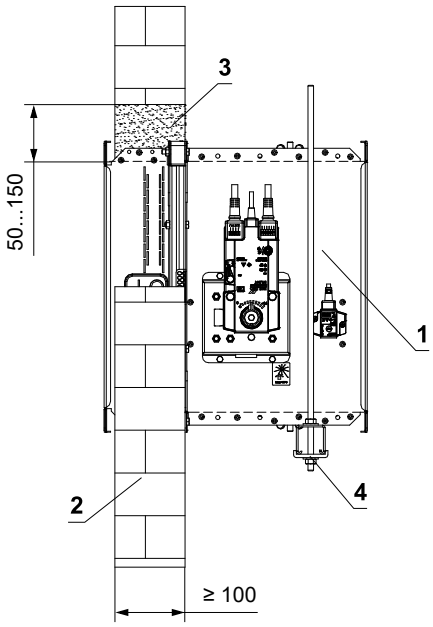

1 FDMQ 120
2 Solid wall construction
3 Mortar or gypsum
4 Profile with threaded rod → see pages 48 to 51
5 Duct

In solid wall construction - 2 dampers in battery - mortar or gypsum

EI 120 (v_e) S [H]

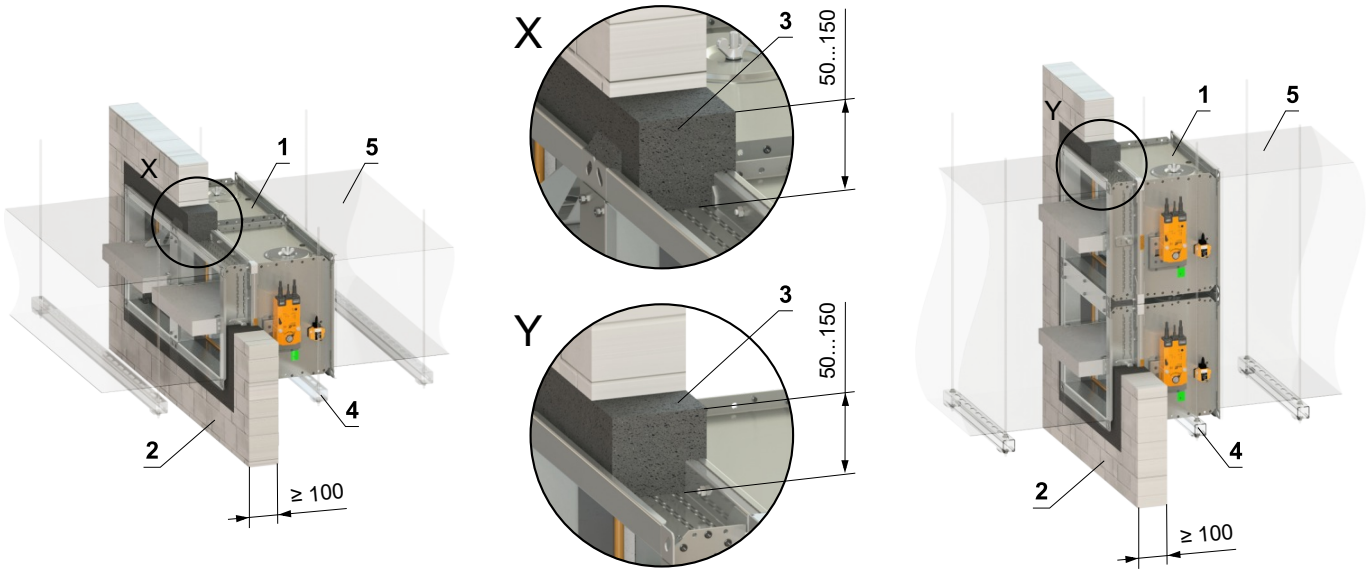

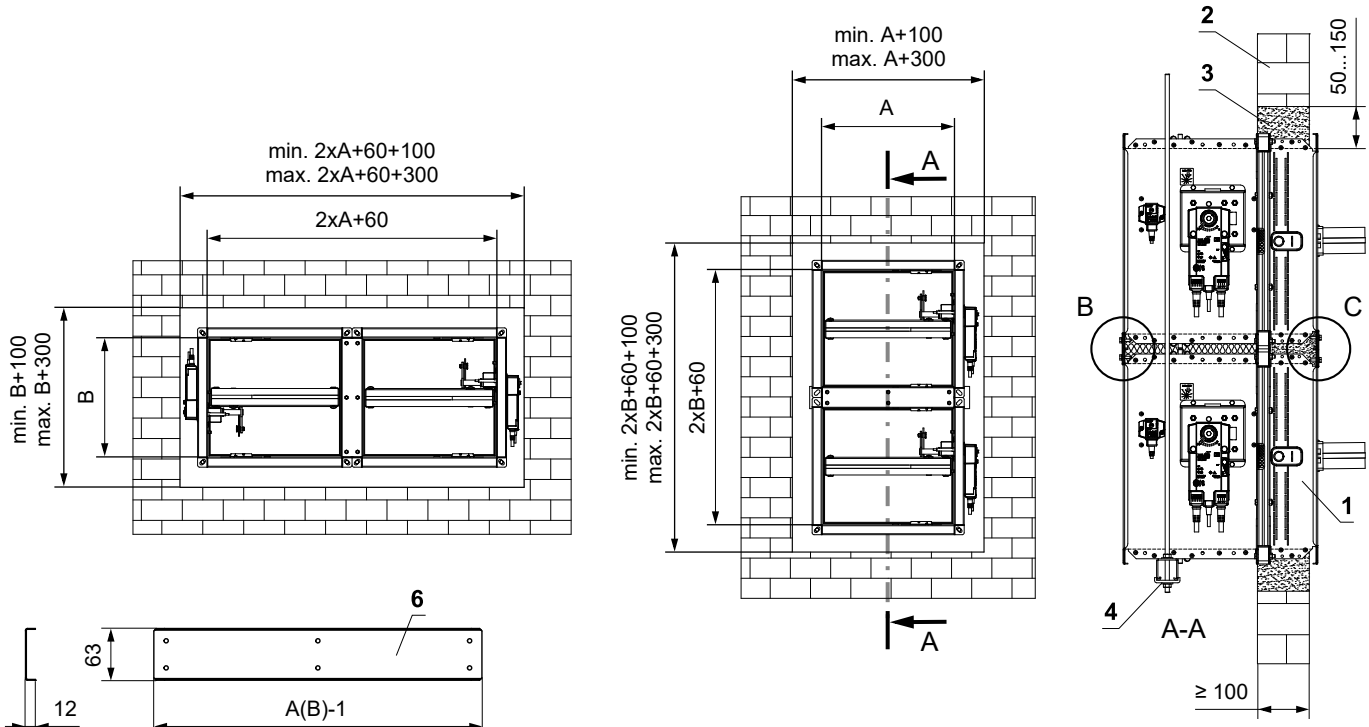

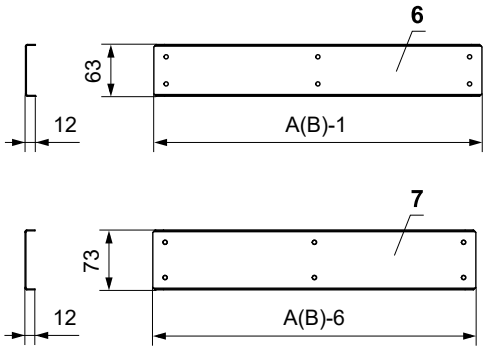

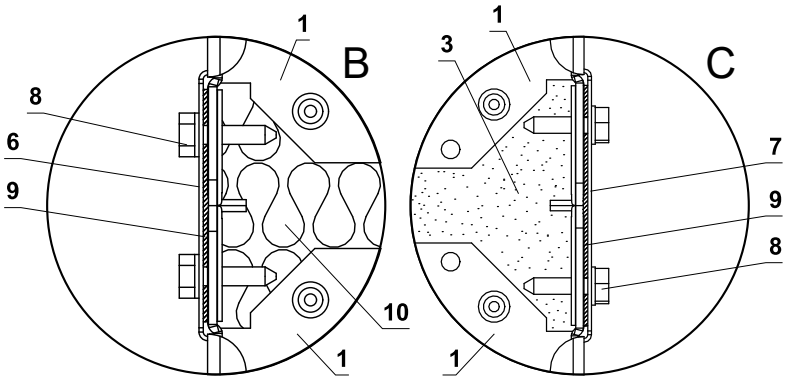

1 FDMQ 120
2 Solid wall construction
3 Mortar or gypsum
4 Profile with threaded rod → see pages 48 to 51
5 Duct
6 U-profile type 3
7 U-profile type 1
8 Screw TEK 4,8x18 mm (span ≤ 200 mm)
9 Sealing
10 Insulation board made of mineral wool - recommended for easy filling of gap with mortar/gypsum.

- For connection following duct → see page 52
- Gap between damper and construction is filled by mortar or gypsum

In solid wall construction - 4 dampers in battery - mortar or gypsum

EI 120 (v_e) S [H]

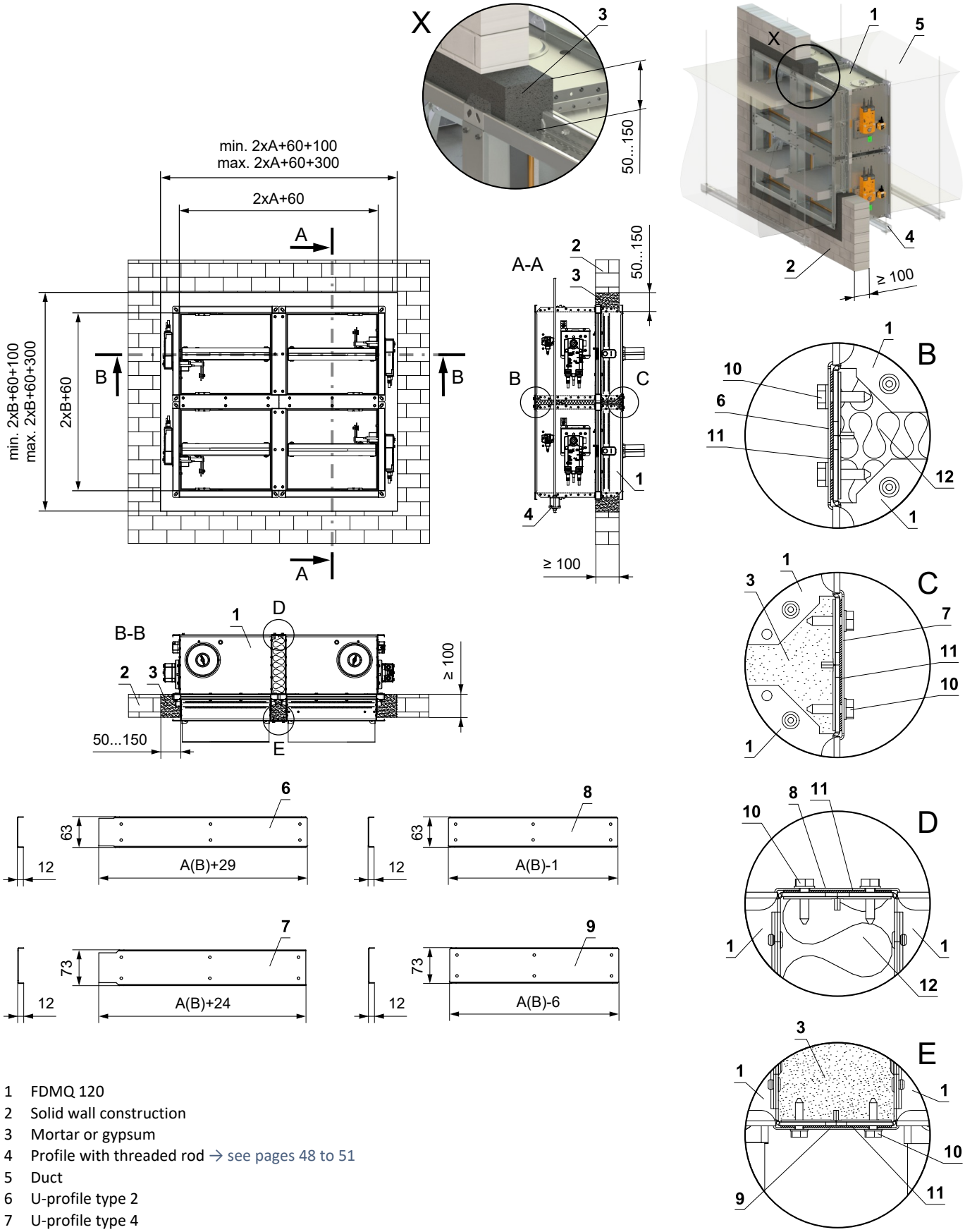

1 FDMQ 120
2 Solid wall construction
3 Mortar or gypsum
4 Profile with threaded rod → see pages 48 to 51
5 Duct
6 U-profile type 2
7 U-profile type 4
8 U-profile type 1
9 U-profile type 3
10 Screw TEK 4,8x18 mm (span ≤ 200 mm)
11 Sealing
12 Insulation board made of mineral wool - recommended for easy filling of gap with mortar/gypsum.

- For connection following duct → see page 52
- Gap between damper and construction is filled by mortar or gypsum

In solid wall construction - Ablative Coated Batt

EI 120 (v_e) S [H]

- For connection following duct → see page 52

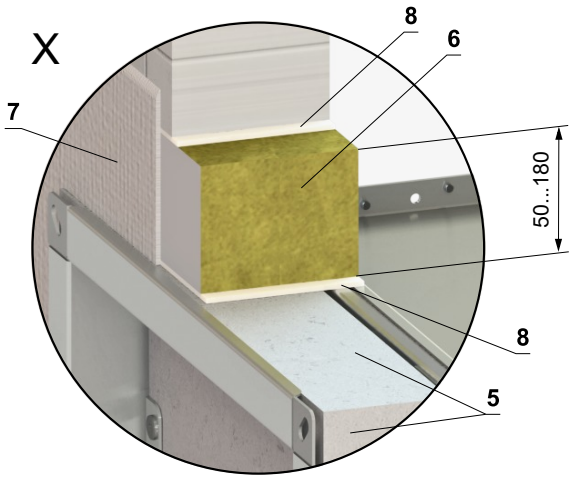

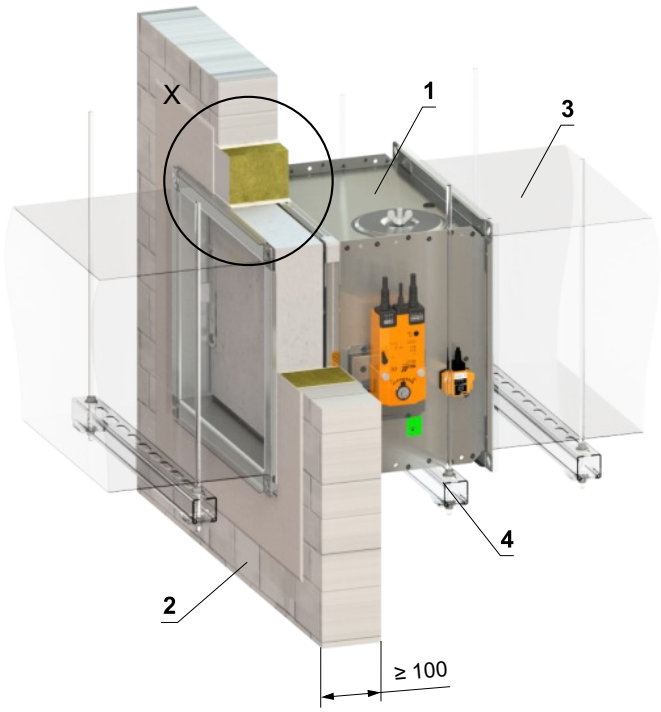

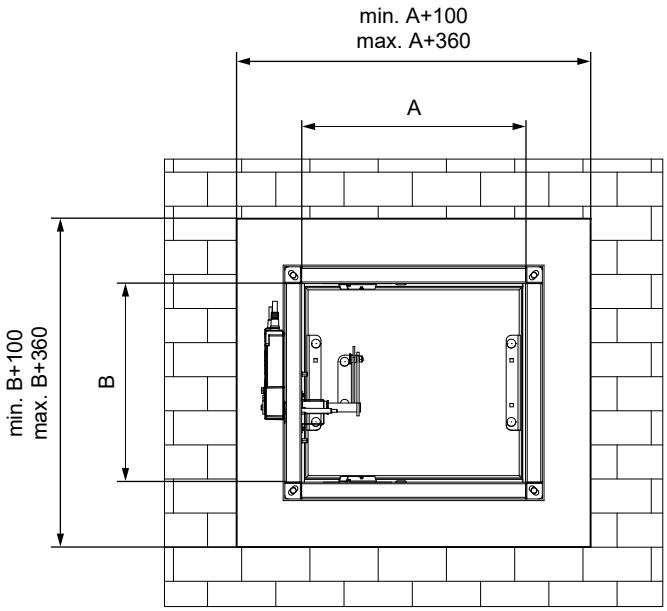

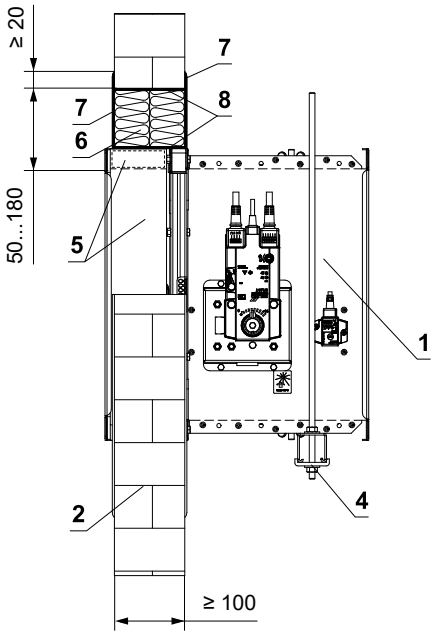

* HILTI system can be replaced by a similar system with the same or higher thickness, density, fire reaction class, tested according to EN 1366-3.

1 FDMQ 120
2 Solid wall construction
3 Duct
4 Profile with threaded rod → see pages 48 to 51
5 Protective cladding board - min. th. 30 mm, min. density 750 kg/m³ (e.g. PROMATECT-MST) → see page 61
Ablative Coated Batt System HILTI*
6 Mineral wool board - min. density 140 kg/m³ (HILTI CFS-CT B 1S 140/50...)
7 Fire stop coating - th. 1 mm (HILTI CFS-CT...) - coating is overcoated on the support construction and on the damper casing/duct
8 Fire-resistant mastic - (HILTI CFS-S ACR...) fill the gap from both sides of the fire separation construction and around the perimeter of penetration and damper casing

Installation outside solid wall construction

Outside solid wall construction - ISOVER Ultimate Protect - Ablative Coated Batt

EI 120 (v_e) S [H]

- For connection following duct → see page 52
- Minimum and maximum distance between the wall and fire damper is unlimited.
- When installing the insulation, follow the ISOVER manufacturer's instructions.
- The damper and the duct must be suspended separately.
- The duct must be suspended on both sides of damper acc. to national rules.
- Duct between fire damper and fire separating construction must be suspended by using threaded rods and mounting profiles, or another anchoring system acc. to national standards.
- The damper inspection openings are covered by insulation and therefore it's necessary to make inspection openings on the connecting duct.
- Load of the suspension system depends on weight of the fire damper and duct system → see page 48
- Max. distance between two suspension systems is 1500 mm
- Duct at the point of penetration must be fixed to the fire separation structure
- Following air-conditioning duct must be suspended or supported so that all load transfer from the following duct to the fire damper is absolutely excluded. Adjacent duct must be suspended or supported, as required by the duct suppliers
- If the threaded rod is located inside the duct insulation, distance between threaded rod and duct is max 30 mm.
- If the threaded rod is located outside the duct isolation, distance between threaded rod and isolation is max. 40 mm.
- Reinforcing frame VRM-Q 120 must always be used for this type of installation. VRM-Q 120 is not a part of the fire damper and must be ordered separately for each installation case! → see page 60

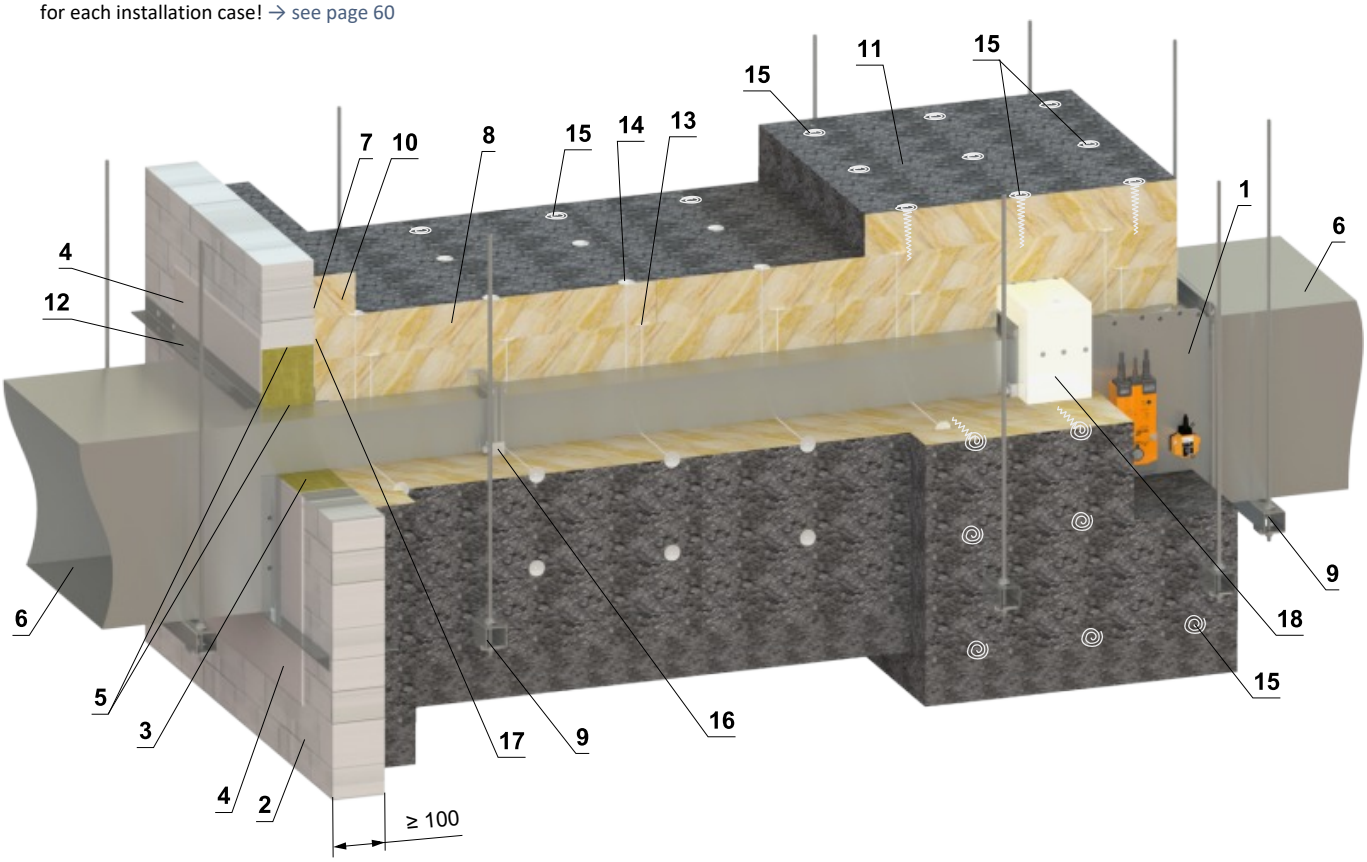

* HILTI system can be replaced by a similar system with the same or higher thickness, density, fire reaction class, tested according to EN 1366-3.

1 FDMQ 120
2 Solid wall construction
Ablative Coated Batt System HILTI*
3 Mineral wool board - min. density 140 kg/m³ (HILTI CFS-CT B 1S 140/50...)
4 Fire stop coating - th. 1 mm (HILTI CFS-CT...) - coating is overcoated on the support construction and on the damper casing/duct
5 Fire-resistant mastic - (HILTI CFS-S ACR...) fill the gap from both sides of the fire separation construction and around the perimeter of penetration and damper casing
6 Standard air duct, made of galvanized sheet metal min. thickness 0,8 mm, flanges 30 mm, acc. to EN 1507 and DIN 24190
7 ISOVER Protect BSK glue - apply on the insulation and fix it to the fire separation construction
8 Insulation board made of mineral wool, with a surface treatment of aluminum foil, min. thickness 80 mm, min. density 66 kg/m³ (System ISOVER Ultimate Protect SLAB 4.0 Alu1)
9 Profile with threaded rod → see pages 48 to 51
10 Duct penetration insulation collar - ISOVER Ultimate Protect SLAB 4.0 Alu1, th. 80 mm - glued (pos. 7) and fixed with screws to the wall construction
11 Insulating collar of the damper and duct connection - ISOVER Ultimate Protect SLAB 4.0 Alu1, th. 80 mm
12 L-profile 30x30x3 mm - dimensions and installation acc. to ISOVER manuf.
13 Stud-welded pins 80 mm - quantity and placing acc. to ISOVER manufa.
14 Stud-welded pins 160 mm - quantity and placing acc. to ISOVER manufa.
15 Fire spiral shaped screws - quantity and placing acc. to ISOVER manufa.
16 Steel clamp min. screw M8
17 ISOVER Protect BSF
18 VRM-Q 120 → see page 60

(continued on next page)

(continuation of installation Outside solid wall construction - ISOVER Ultimate Protect - Ablative Coated Batt)

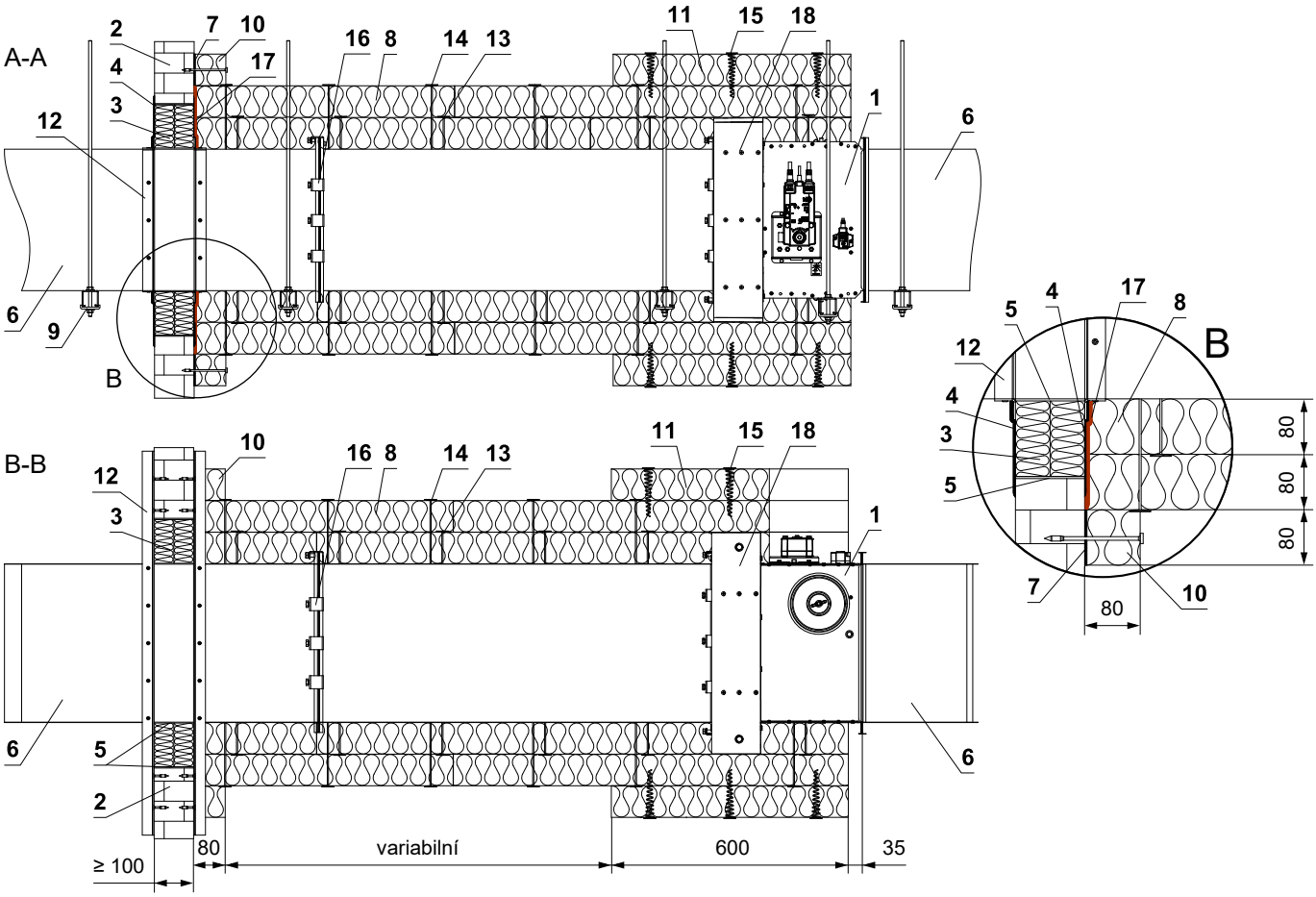

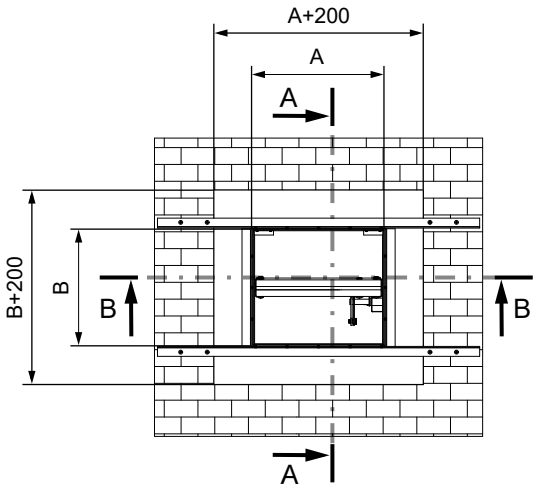

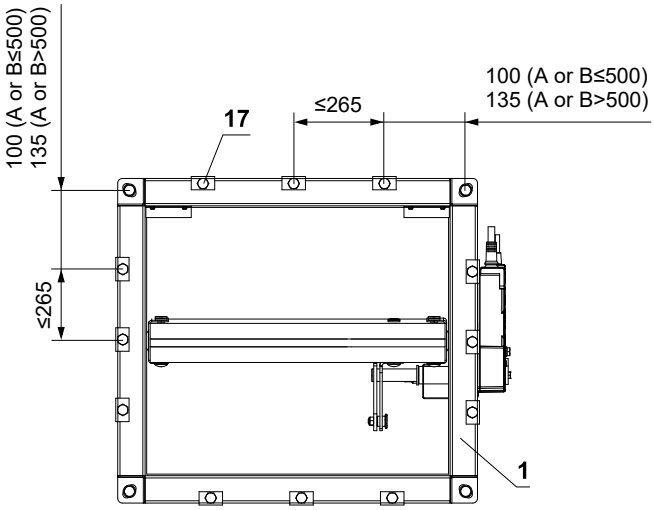

* HILTI system can be replaced by a similar system with the same or higher thickness, density, fire reaction class, tested according to EN 1366-3.

1 FDMQ 120
2 Solid wall construction
Ablative Coated Batt System HILTI*
3 Mineral wool board - min. density 140 kg/m³ (HILTI CFS-CT B 1S 140/50...)
4 Fire stop coating - th. 1 mm (HILTI CFS-CT...) - coating is overcoated on the support construction and on the damper casing/duct
5 Fire-resistant mastic - (HILTI CFS-S ACR...) fill the gap from both sides of the fire separation construction and around the perimeter of penetration and damper casing
6 Standard air duct, made of galvanized sheet metal min. thickness 0,8 mm, flanges 30 mm, acc. to EN 1507 and DIN 24190
7 ISOVER Protect BSK glue - apply on the insulation and fix it to the fire separation construction
8 Insulation board made of mineral wool, with a surface treatment of aluminum foil, min. thickness 80 mm, min. density 66 kg/m³ (System ISOVER Ultimate Protect SLAB 4.0 Alu1)
9 Profile with threaded rod → see pages 48 to 51
10 Duct penetration insulation collar - ISOVER Ultimate Protect SLAB 4.0 Alu1, th. 80 mm - glued (pos. 7) and fixed with screws to the wall construction
11 Insulating collar of the damper and duct connection - ISOVER Ultimate Protect SLAB 4.0 Alu1, th. 80 mm
12 L-profile 30x30x3 mm - dimensions and installation acc. to ISOVER manuf.
13 Stud-welded pins 80 mm - quantity and placing acc. to ISOVER manufa.
14 Stud-welded pins 160 mm - quantity and placing acc. to ISOVER manufa.
15 Fire spiral shaped screws - quantity and placing acc. to ISOVER manufa.
16 Steel clamp min. screw M8
17 ISOVER Protect BSF
18 VRM-Q 120 → see page 60

Outside solid wall construction - Flamebar EN Fire Duct - FPL 110 insulation

EI 120 (v_e) S [H]

- Minimum and maximum distance between the wall and the fire damper is unlimited.
- The fire damper and duct must be suspended separately.
- The duct must be suspended on both sides of the fire damper in accordance with national standards.
- The duct between the fire damper and the fire separating construction must be suspended using threaded rods and mounting profiles or another suspension system in accordance with national standards.
- Fire damper inspection holes are covered with insulation, therefore it's necessary to install an access door in the connecting duct. (This must be a Flamebar access door if installed in the fire duct.)
- Load on suspension system depends on weight of the fire damper and duct system → see page 48
- Max. length between two suspension systems is 1500 mm.
- Installation must be done in such a way that all load transfer from the fire separating construction to the damper is completely eliminated.
- Reinforcing frame VRM-Q 120 must always be used for this type of installation. VRM-Q 120 is not part of the fire damper and must be ordered separately for each installation! → see page 60

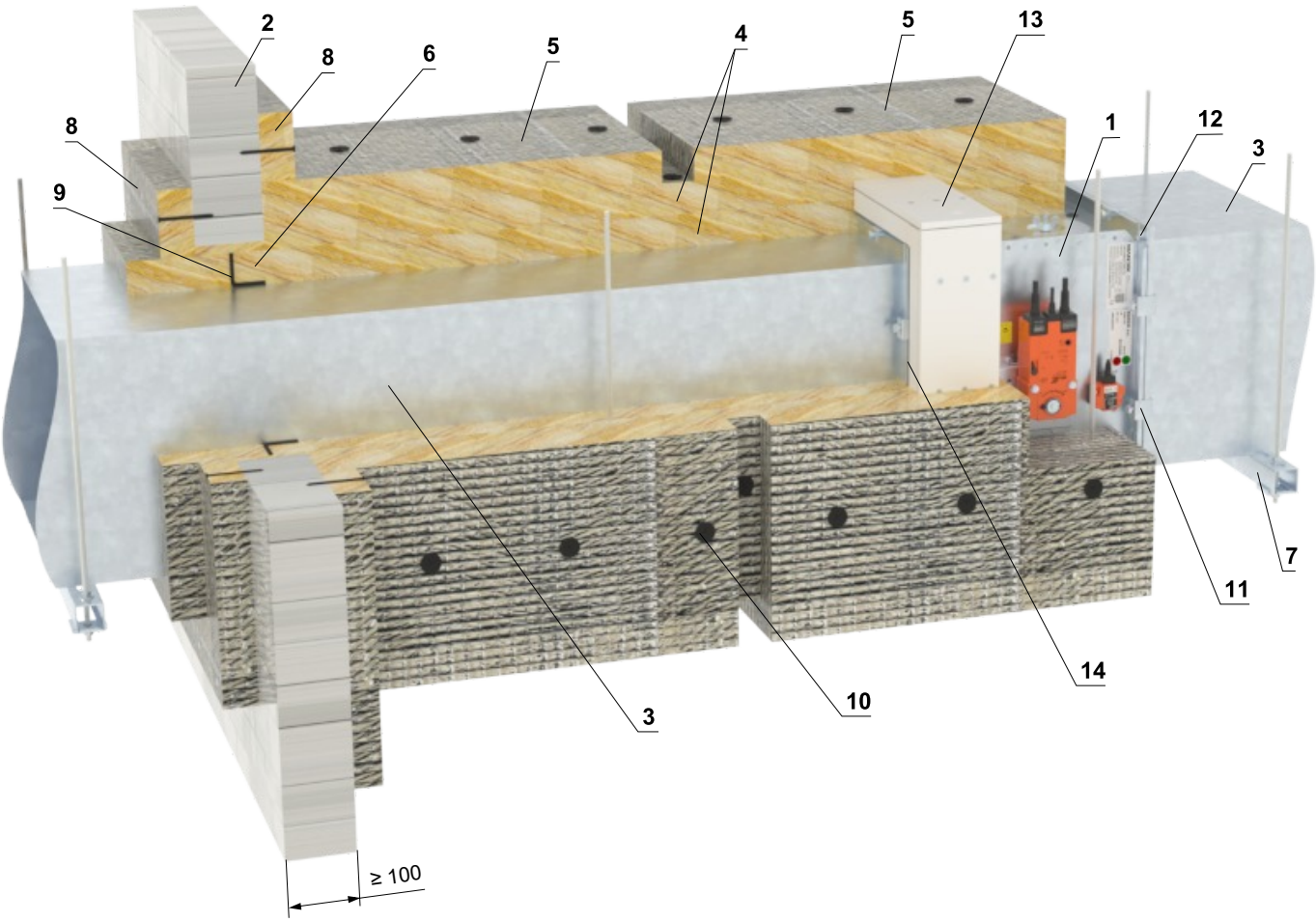

1 FDMQ 120
2 Solid wall construction
3 Flamebar EN fire Duct - made of galvanised sheet metal, thickness is dependant on duct size, type BW18 fire sprayed with Flamebar BW18 (insulated duct), type BW11 fire sprayed with Flamebar BW11 (not insulated duct)
4 Insulation - two layers of stone wool FPL 110 SLAB, thickness 2x 50 mm, density 105 kg/m³, the second layer of insulation is provided with aluminium foil on the outside (FPL 110 FOIL FACED SLAB) - visible edges of mineral wool are covered with self-adhesive aluminium tape
5 Insulation collar - additional insulation of the fire damper and gypsum wall construction - third layer of insulation FPL 110 FOIL FACED SLAB, thickness 50 mm and width 600 mm
6 Filling - FPL 110 mineral wool - fill the gap between the duct and the wall
7 Fixing profile with threaded rod → see pages 48 to 51
8 Penetration insulation pattress - FPL 110 FOIL FACED SLAB, thickness 50 mm - glued with Idenden 10-450 and fixed with screws to the wall construction
9 Reinforcement of the duct - steel L-profile 50x50x5 mm or flange to Flamebar spec. on all sides of the duct within 100 mm of the wall
10 Insulation pins - riveted to the duct - after the insulation boards are pushed over the insulation pins, secure the ends with disc plates in each insulation layer
11 Steel clamp - flange connection with Flamebar G-Clamps with M8 bolts, max. spacing 200 mm
12 Bolt assembly - flange connection at corners - M10 bolt and nut
13 VRM-Q 120 → see page 60
14 Sealing - all joints between duct segments are insulated with Flamebar Fibre Gasket self-adhesive tape and Flamebar Intumescent Sealant

(continued on next page)

(continuation of installation Outside solid wall construction - FPL duct - Rockwool insulation

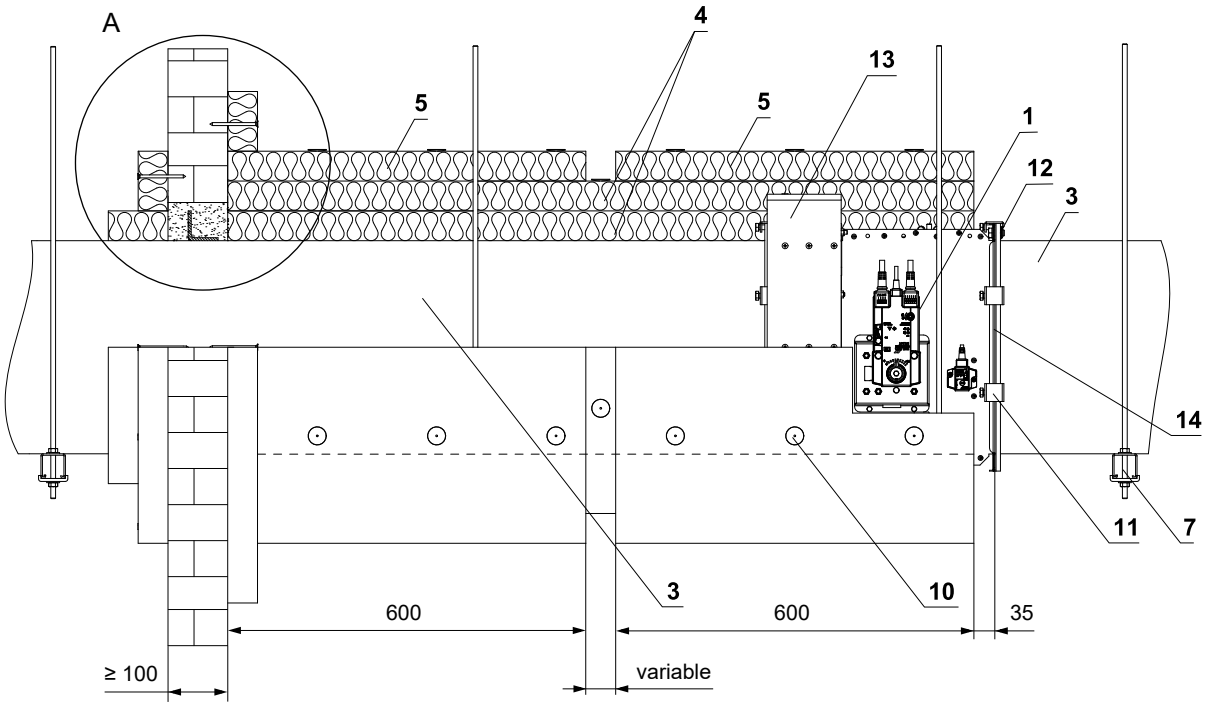

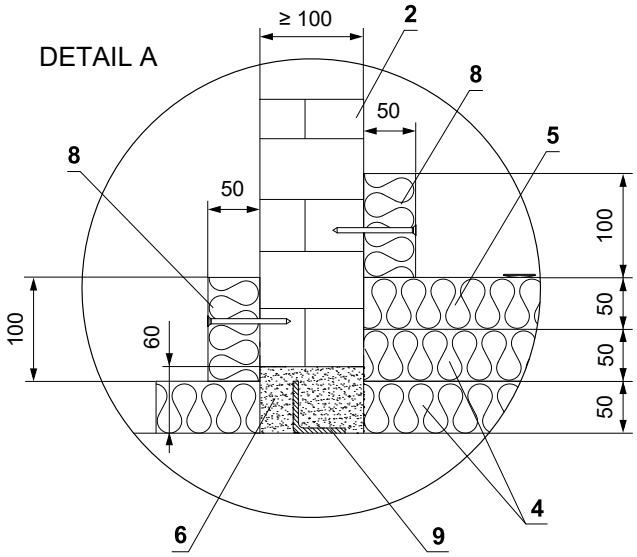

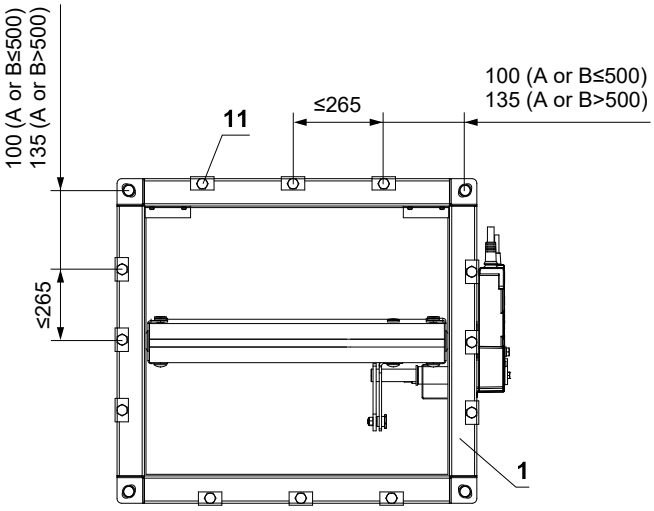

1 FDMQ 120
2 Solid wall construction
3 Flamebar EN fire Duct - made of galvanised sheet metal, thickness is dependant on duct size, type BW18 fire sprayed with Flamebar BW18 (insulated duct), type BW11 fire sprayed with Flamebar BW11 (not insulated duct)
4 Insulation - two layers of stone wool FPL 110 SLAB, thickness 2x 50 mm, density 105 kg/m³, the second layer of insulation is provided with aluminium foil on the outside (FPL 110 FOIL FACED SLAB) - visible edges of mineral wool are covered with self-adhesive aluminium tape
5 Insulation collar - additional insulation of the fire damper and gypsum wall construction - third layer of insulation FPL 110 FOIL FACED SLAB, thickness 50 mm and width 600 mm
6 Filling - FPL 110 mineral wool - fill the gap between the duct and the wall
7 Fixing profile with threaded rod → see pages 48 to 51
8 Penetration insulation pattress - FPL 110 FOIL FACED SLAB, thickness 50 mm - glued with Idenden 10-450 and fixed with screws to the wall construction
9 Reinforcement of the duct - steel L-profile 50x50x5 mm or flange to Flamebar spec. on all sides of the duct within 100 mm of the wall
10 Insulation pins - riveted to the duct - after the insulation boards are pushed over the insulation pins, secure the ends with disc plates in each insulation layer
11 Steel clamp - flange connection with Flamebar G-Clamps with M8 bolts, max. spacing 200 mm
12 Bolt assembly - flange connection at corners - M10 bolt and nut
13 VRM-Q 120 → see page 60
14 Sealing - all joints between duct segments are insulated with Flamebar Fibre Gasket self-adhesive tape and Flamebar Intumescent Sealant

Installation in gypsum wall construction

In gypsum wall construction - mortar or gypsum

EI 120 (v_e) S [H] - 500 Pa

- For connection following duct → see page 52
- The installation opening is lined with a UW/CW profile.

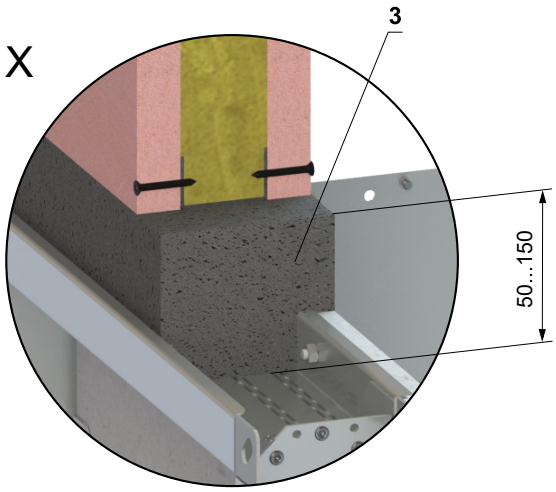

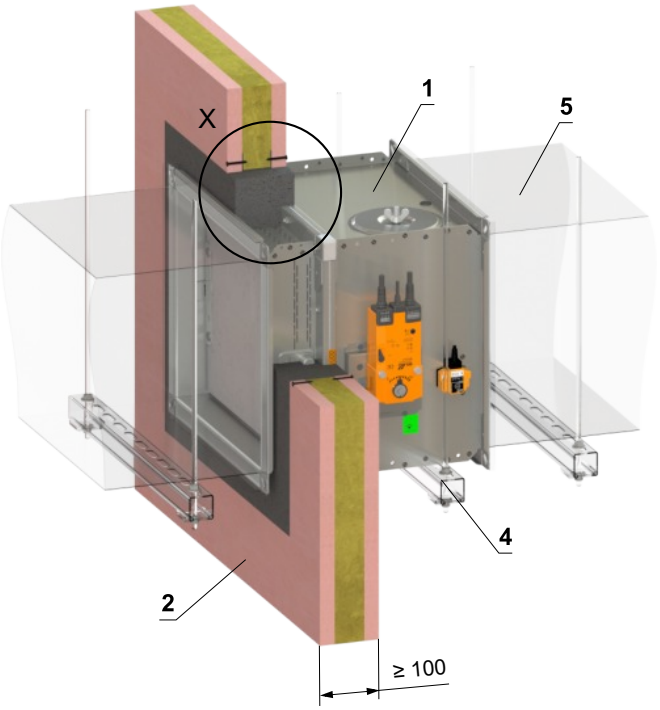

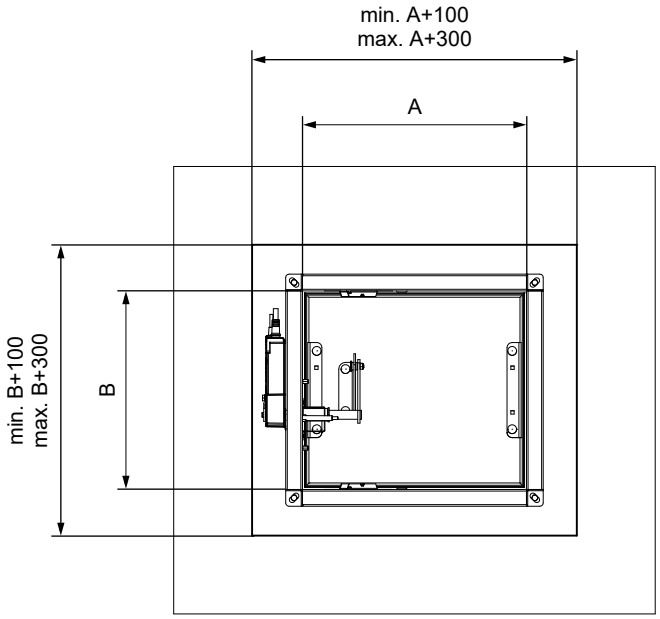

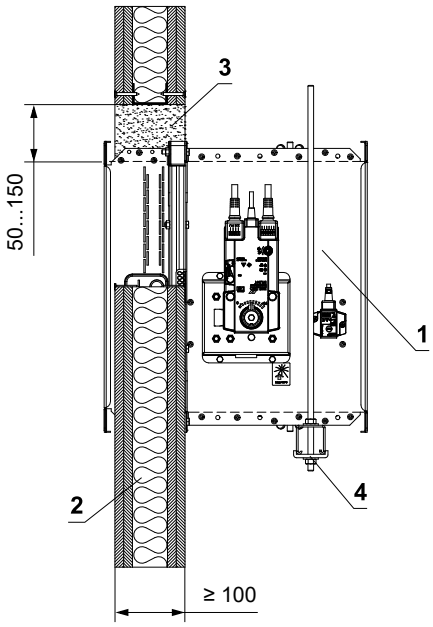

1 FDMQ 120
2 Gypsum wall construction
3 Mortar or gypsum
4 Profile with threaded rod → see pages 48 to 51
5 Duct

In gypsum wall construction - 2 dampers in battery - mortar or gypsum

EI 120 (v_e) S [H]

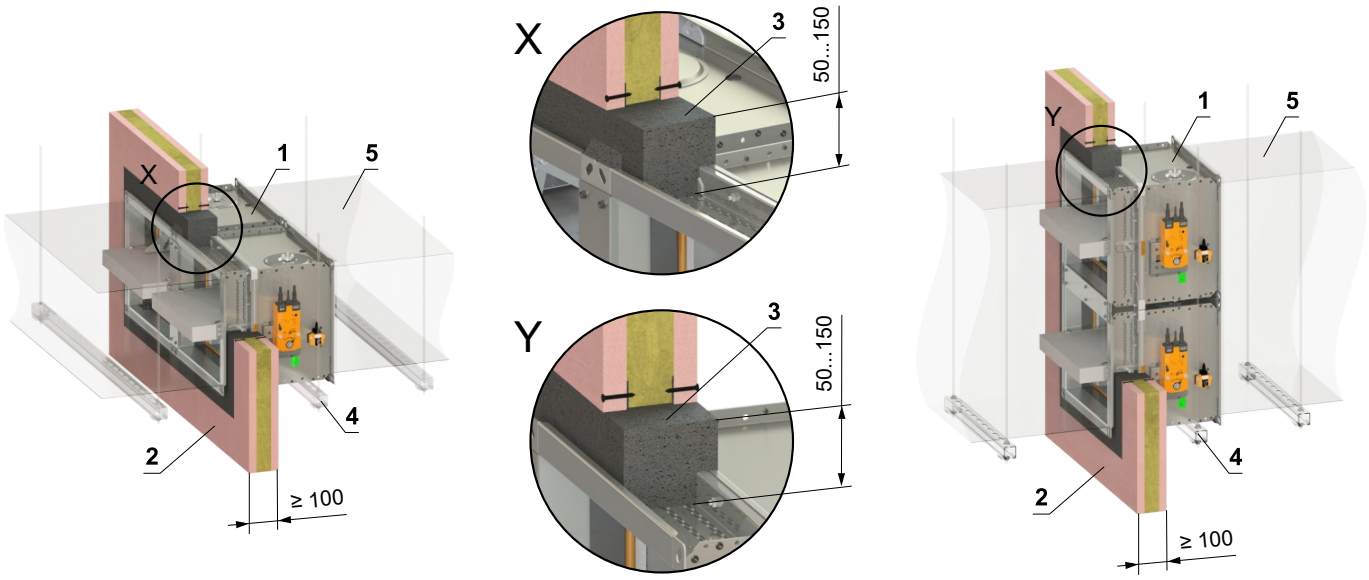

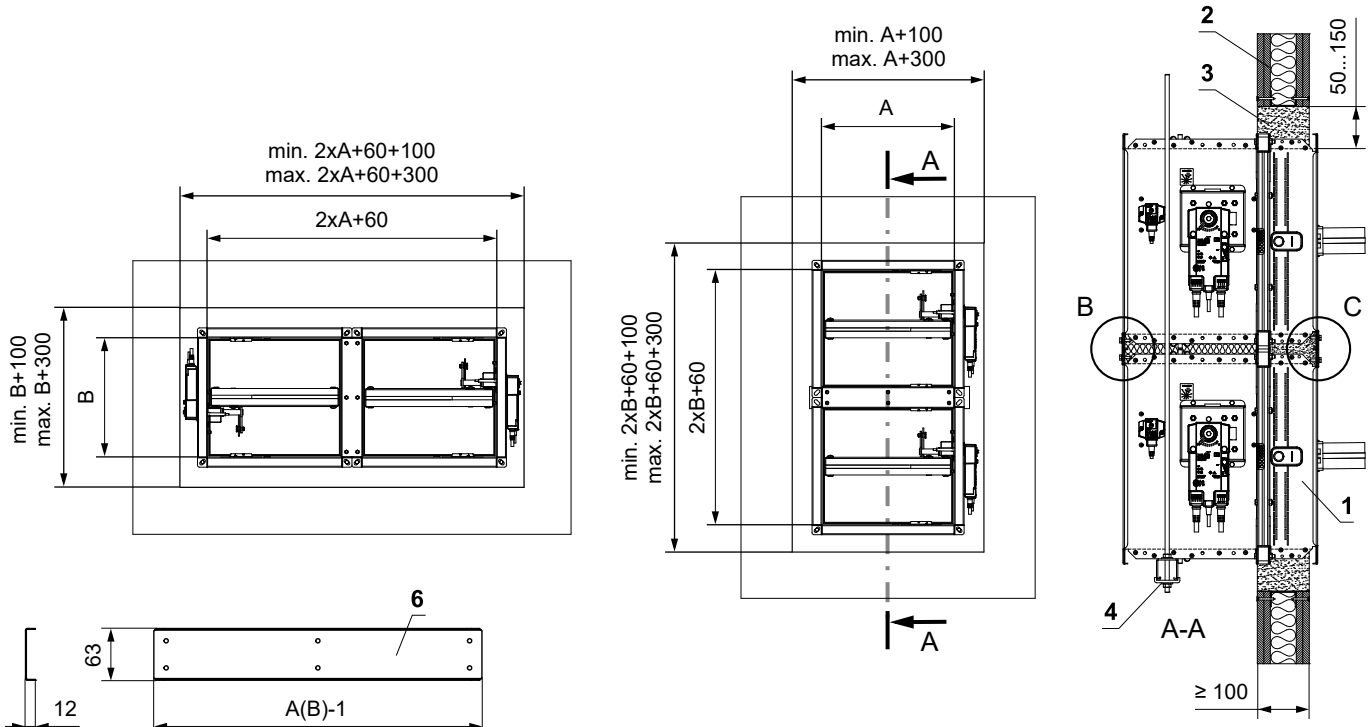

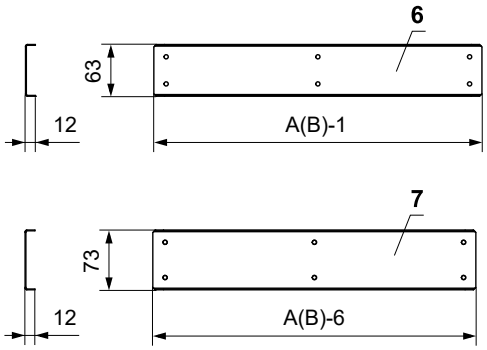

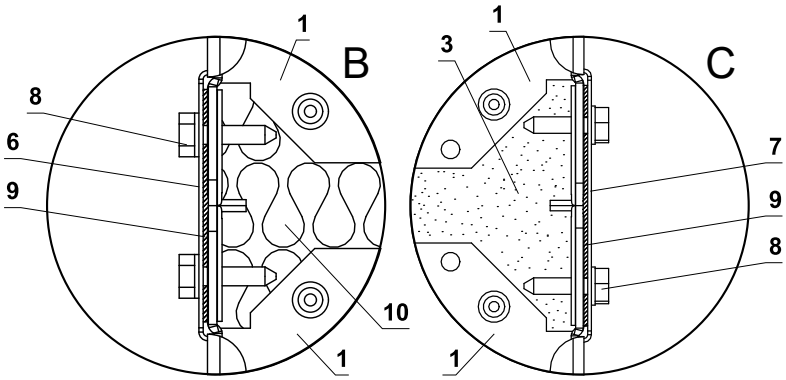

1 FDMQ 120
2 Gypsum wall construction
3 Mortar or gypsum
4 Profile with threaded rod → see pages 48 to 51
5 Duct
6 U-profile type 3
7 U-profile type 1
8 Screw TEK 4,8x18 mm (span ≤ 200 mm)
9 Sealing
10 Insulation board made of mineral wool - recommended for easy filling of gap with mortar/gypsum.

- For connection following duct → see page 52
- Gap between damper and construction is filled by mortar or gypsum
- The installation opening is lined with a UW/CW profile.

In gypsum wall construction - 4 dampers in battery - mortar or gypsum

EI 120 (v_e) S [H]

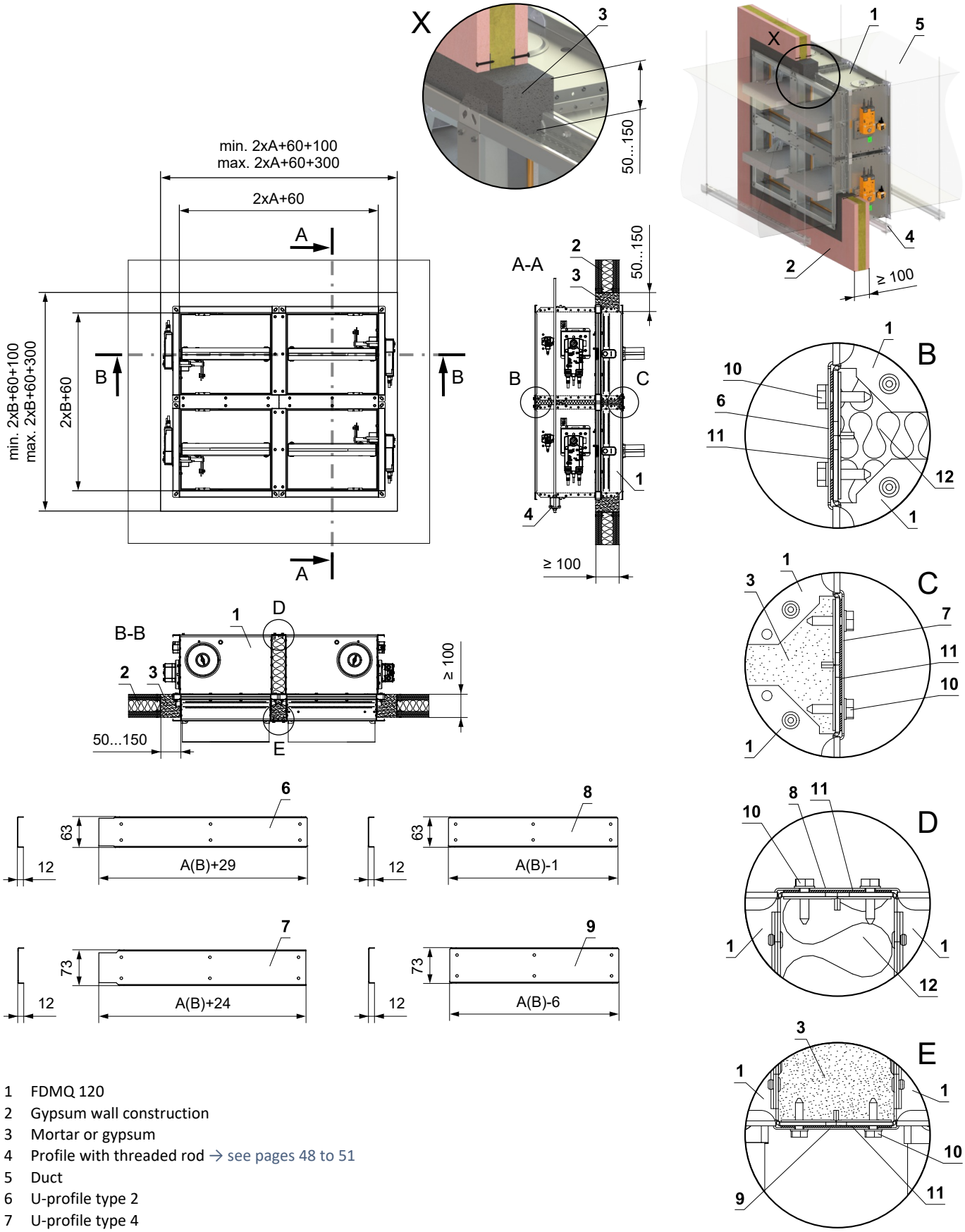

1 FDMQ 120
2 Gypsum wall construction
3 Mortar or gypsum
4 Profile with threaded rod → see pages 48 to 51
5 Duct
6 U-profile type 2
7 U-profile type 4
8 U-profile type 1
9 U-profile type 3
10 Screw TEK 4,8x18 mm (span ≤ 200 mm)
11 Sealing
12 Insulation board made of mineral wool - recommended for easy filling of gap with mortar/gypsum.

- For connection following duct → see page 52
- Gap between damper and construction is filled by mortar or gypsum
- The installation opening is lined with a UW/CW profile.

In gypsum wall construction - Ablative Coated Batt

EI 120 (v_e) S [H]

- For connection following duct → see page 52
- The installation opening is lined with a UW/CW profile.

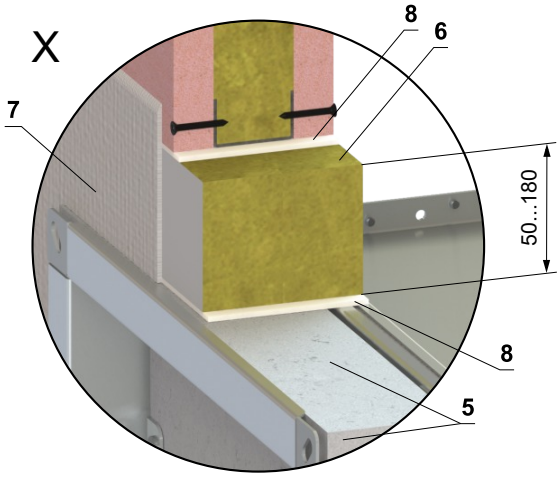

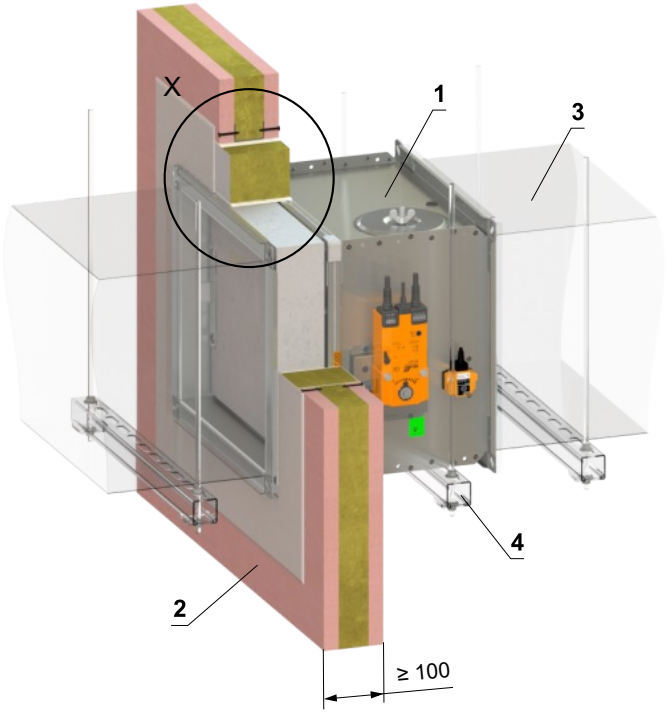

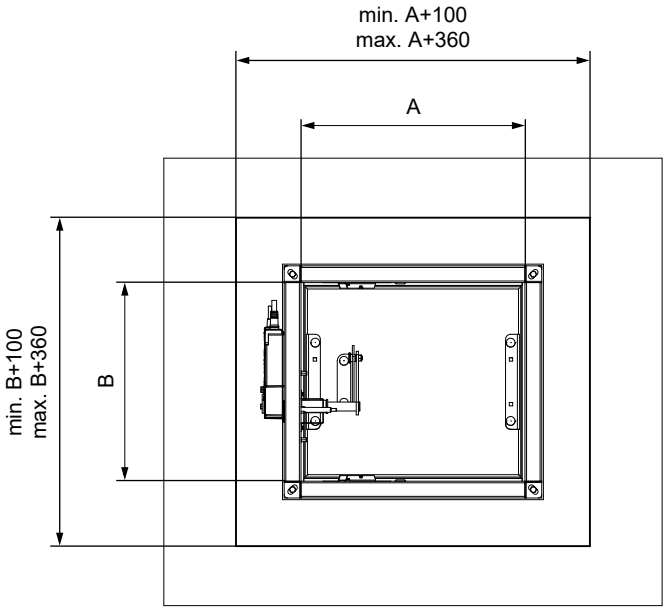

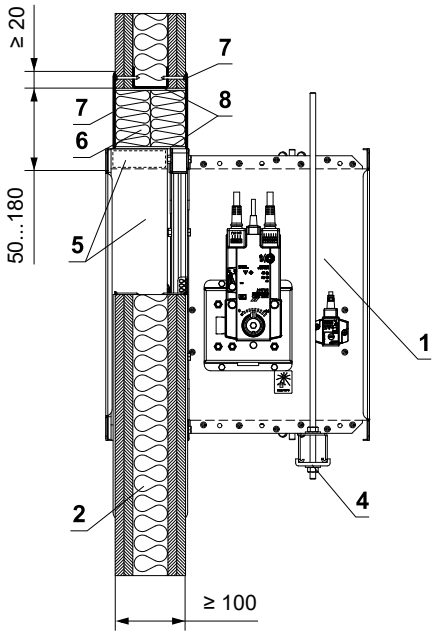

* HILTI system can be replaced by a similar system with the same or higher thickness, density, fire reaction class, tested according to EN 1366-3.

1 FDMQ 120
2 Gypsum wall construction
3 Duct
4 Profile with threaded rod → see pages 48 to 51
5 Protective cladding board - min. th. 30 mm, min. density 750 kg/m³ (e.g. PROMATECT-MST) → see page 61
Ablative Coated Batt System HILTI*
6 Mineral wool board - min. density 140 kg/m³ (HILTI CFS-CT B 1S 140/50...)
7 Fire stop coating - th. 1 mm (HILTI CFS-CT...) - coating is overcoated on the support construction and on the damper casing/duct
8 Fire-resistant mastic - (HILTI CFS-S ACR...) fill the gap from both sides of the fire separation construction and around the perimeter of penetration and damper casing

Installation outside gypsum wall construction

Outside gypsum wall construction - ISOVER Ultimate Protect - Ablative Coated Batt

EI 120 (v_e) S [H]

- For connection following duct → see page 52
- Minimum and maximum distance between the wall and fire damper is unlimited.
- When installing the insulation, follow the ISOVER manufacturer's instructions.
- The damper and the duct must be suspended separately.
- The duct must be suspended on both sides of damper acc. to national rules.
- Duct between fire damper and fire separating construction must be suspended by using threaded rods and mounting profiles, or another anchoring system acc. to national standards.
- The damper inspection openings are covered by insulation and therefore it's necessary to make inspection openings on the connecting duct.
- Load of the suspension system depends on weight of the fire damper and duct system → see page 48
- Max. distance between two suspension systems is 1500 mm
- Duct at the point of penetration must be fixed to the fire separation structure
- Following air-conditioning duct must be suspended or supported so that all load transfer from the following duct to the fire damper is absolutely excluded. Adjacent duct must be suspended or supported, as required by the duct suppliers
- If the threaded rod is located inside the duct insulation, distance between threaded rod and duct is max 30 mm.
- If the threaded rod is located outside the duct isolation, distance between threaded rod and isolation is max. 40 mm.
- Reinforcing frame VRM-Q 120 must always be used for this type of installation. VRM-Q 120 is not a part of the fire damper and must be ordered separately for each installation case! → see page 60
- The installation opening is lined with a UW/CW profile.

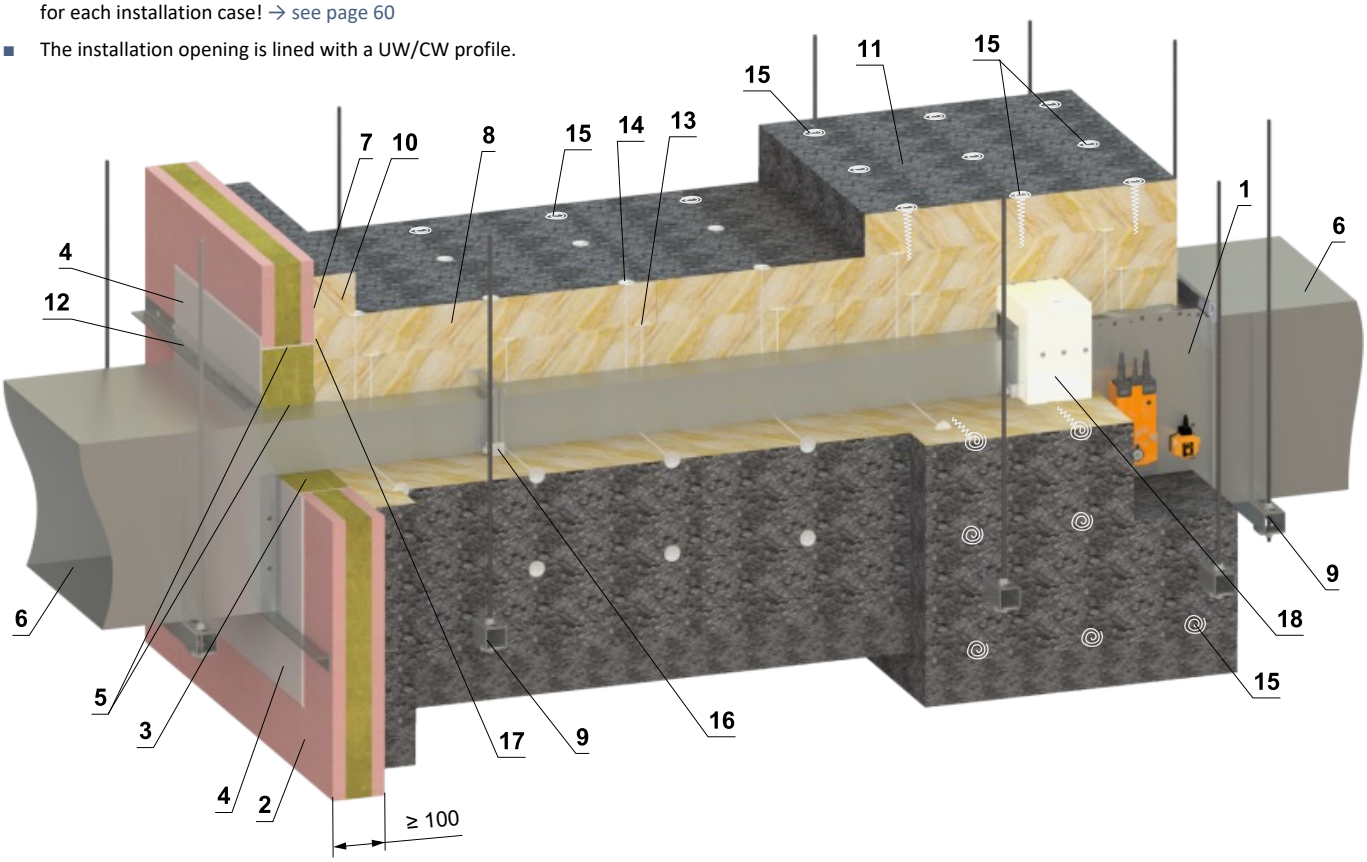

* HILTI system can be replaced by a similar system with the same or higher thickness, density, fire reaction class, tested according to EN 1366-3.

1 FDMQ 120
2 Gypsum wall construction
Ablative Coated Batt System HILTI*
3 Mineral wool board - min. density 140 kg/m³ (HILTI CFS-CT B 1S 140/50...)
4 Fire stop coating - th. 1 mm (HILTI CFS-CT...) - coating is overcoated on the support construction and on the damper casing/duct
5 Fire-resistant mastic - (HILTI CFS-S ACR...) fill the gap from both sides of the fire separation construction and around the perimeter of penetration and damper casing
6 Standard air duct, made of galvanized sheet metal min. thickness 0,8 mm, flanges 30 mm, acc. to EN 1507 and DIN 24190
7 ISOVER Protect BSK glue - apply on the insulation and fix it to the fire separation construction
8 Insulation board made of mineral wool, with a surface treatment of aluminum foil, min. thickness 80 mm, min. density 66 kg/m³ (System ISOVER Ultimate Protect SLAB 4.0 Alu1)
9 Profile with threaded rod → see pages 48 to 51
10 Duct penetration insulation collar - ISOVER Ultimate Protect SLAB 4.0 Alu1, th. 80 mm - glued (pos. 7) and fixed with screws to the wall construction
11 Insulating collar of the damper and duct connection - ISOVER Ultimate Protect SLAB 4.0 Alu1, th. 80 mm
12 L-profile 30x30x3 mm - dimensions and installation acc. to ISOVER manuf.
13 Stud-welded pins 80 mm - quantity and placing acc. to ISOVER manufa.
14 Stud-welded pins 160 mm - quantity and placing acc. to ISOVER manufa.
15 Fire spiral shaped screws - quantity and placing acc. to ISOVER manufa.
16 Steel clamp min. screw M8
17 ISOVER Protect BSF
18 VRM-Q 120 → see page 60

(continued on next page)

(continuation of installation Outside gypsum wall construction - ISOVER Ultimate Protect - Ablative Coated Batt)

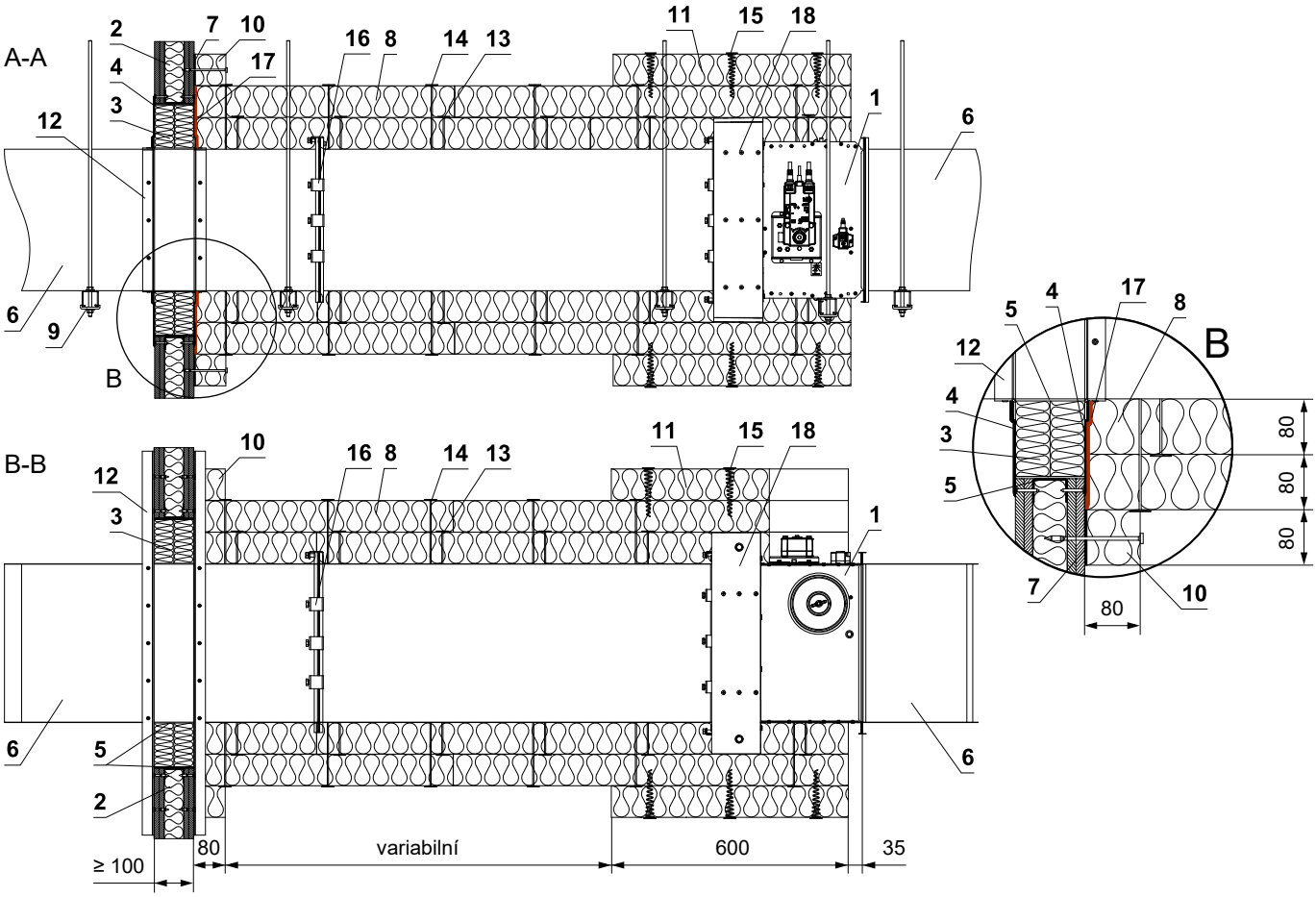

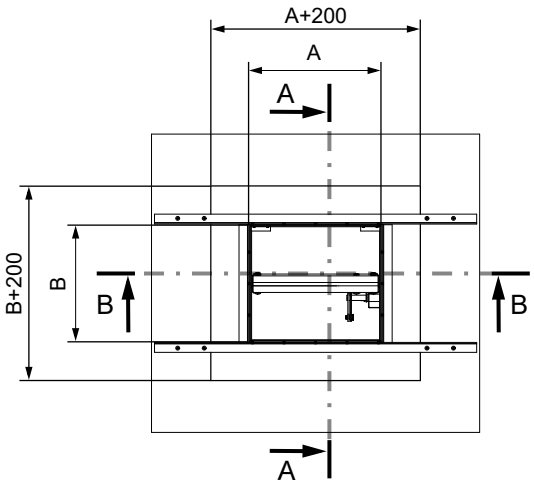

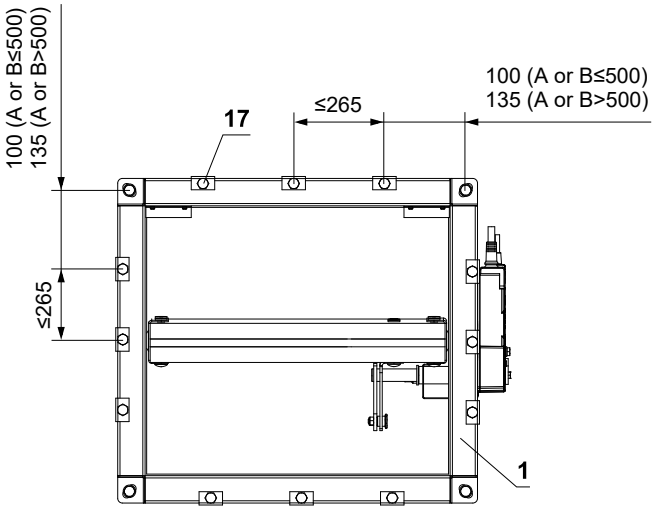

* HILTI system can be replaced by a similar system with the same or higher thickness, density, fire reaction class, tested according to EN 1366-3.

1 FDMQ 120
2 Gypsum wall construction
Ablative Coated Batt System HILTI*
3 Mineral wool board - min. density 140 kg/m³ (HILTI CFS-CT B 1S 140/50...)
4 Fire stop coating - th. 1 mm (HILTI CFS-CT...) - coating is overcoated on the support construction and on the damper casing/duct
5 Fire-resistant mastic - (HILTI CFS-S ACR...) fill the gap from both sides of the fire separation construction and around the perimeter of penetration and damper casing
6 Standard air duct, made of galvanized sheet metal min. thickness 0,8 mm, flanges 30 mm, acc. to EN 1507 and DIN 24190
7 ISOVER Protect BSK glue - apply on the insulation and fix it to the fire separation construction
8 Insulation board made of mineral wool, with a surface treatment of aluminum foil, min. thickness 80 mm, min. density 66 kg/m³ (System ISOVER Ultimate Protect SLAB 4.0 Alu1)
9 Profile with threaded rod → see pages 48 to 51
10 Duct penetration insulation collar - ISOVER Ultimate Protect SLAB 4.0 Alu1, th. 80 mm - glued (pos. 7) and fixed with screws to the wall construction
11 Insulating collar of the damper and duct connection - ISOVER Ultimate Protect SLAB 4.0 Alu1, th. 80 mm
12 L-profile 30x30x3 mm - dimensions and installation acc. to ISOVER manuf.
13 Stud-welded pins 80 mm - quantity and placing acc. to ISOVER manufa.
14 Stud-welded pins 160 mm - quantity and placing acc. to ISOVER manufa.
15 Fire spiral shaped screws - quantity and placing acc. to ISOVER manufa.
16 Steel clamp min. screw M8
17 ISOVER Protect BSF
18 VRM-Q 120 → see page 60

Outside gypsum wall construction - Flamebar EN Fire Duct - FPL 110 insulation

EI 120 (v_e) S [H]

- Minimum and maximum distance between the wall and the fire damper is unlimited.
- The fire damper and duct must be suspended separately.
- The duct must be suspended on both sides of the fire damper in accordance with national standards.
- The duct between the fire damper and the fire separating construction must be suspended using threaded rods and mounting profiles or another suspension system in accordance with national standards.
- Fire damper inspection holes are covered with insulation, therefore it's necessary to install an access door in the connecting duct. (This must be a Flamebar access door if installed in the fire duct.)
- Load on suspension system depends on weight of the fire damper and duct system → see page 48
- Max. length between two suspension systems is 1500 mm.
- Installation must be done in such a way that all load transfer from the fire separating construction to the damper is completely eliminated.
- Reinforcing frame VRM-Q 120 must always be used for this type of installation. VRM-Q 120 is not part of the fire damper and must be ordered separately for each installation! → see page 60
- The installation opening is lined with a UW/CW profile.

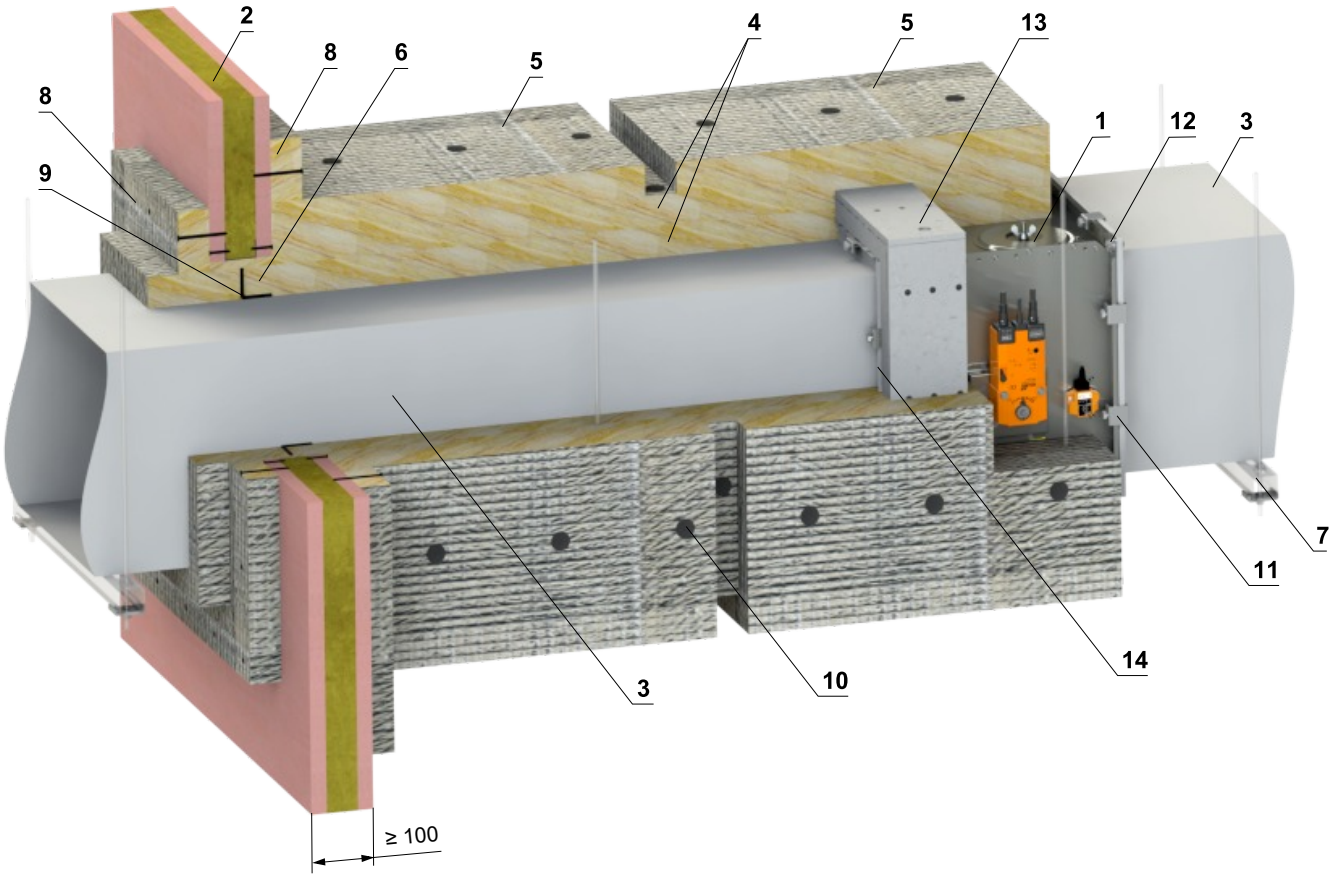

1 FDMQ 120
2 Gypsum wall construction
3 Flamebar EN fire Duct - made of galvanised sheet metal, thickness is dependant on duct size, type BW18 fire sprayed with Flamebar BW18 (insulated duct), type BW11 fire sprayed with Flamebar BW11 (not insulated duct)
4 Insulation - two layers of stone wool FPL 110 SLAB, thickness 2x 50 mm, density 105 kg/m³, the second layer of insulation is provided with aluminium foil on the outside (FPL 110 FOIL FACED SLAB) - visible edges of mineral wool are covered with self-adhesive aluminium tape
5 Insulation collar - additional insulation of the fire damper and gypsum wall construction - third layer of insulation FPL 110 FOIL FACED SLAB, thickness 50 mm and width 600 mm
6 Filling - FPL 110 mineral wool - fill the gap between the duct and the wall
7 Fixing profile with threaded rod → see pages 48 to 51
8 Penetration insulation pattress - FPL 110 FOIL FACED SLAB, thickness 50 mm - glued with Idenden 10-450 and fixed with screws to the wall construction
9 Reinforcement of the duct - steel L-profile 50x50x5 mm or flange to Flamebar spec. on all sides of the duct within 100 mm of the wall
10 Insulation pins - riveted to the duct - after the insulation boards are pushed over the insulation pins, secure the ends with disc plates in each insulation layer
11 Steel clamp - flange connection with Flamebar G-Clamps with M8 bolts, max. spacing 200 mm
12 Bolt assembly - flange connection at corners - M10 bolt and nut
13 VRM-Q 120 → see page 60
14 Sealing - all joints between duct segments are insulated with Flamebar Fibre Gasket self-adhesive tape and Flamebar Intumescent Sealant

(continued on next page)

(continuation of installation Outside gypsum wall construction - FPL duct - Rockwool insulation

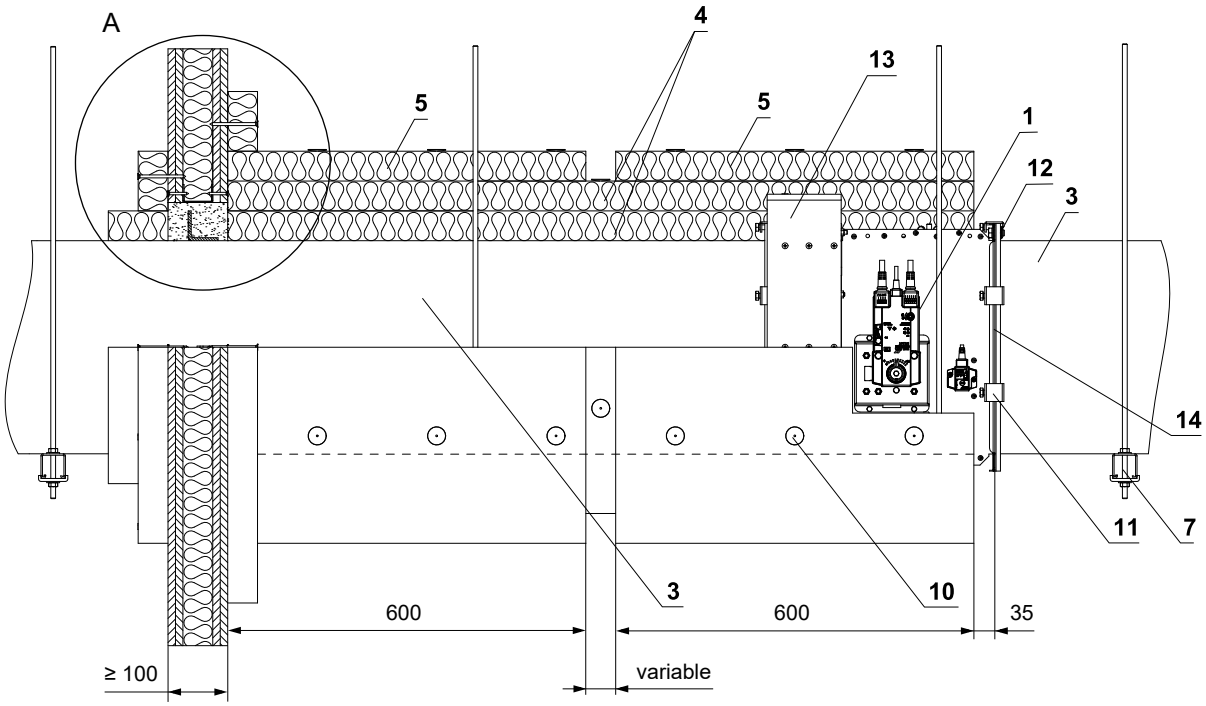

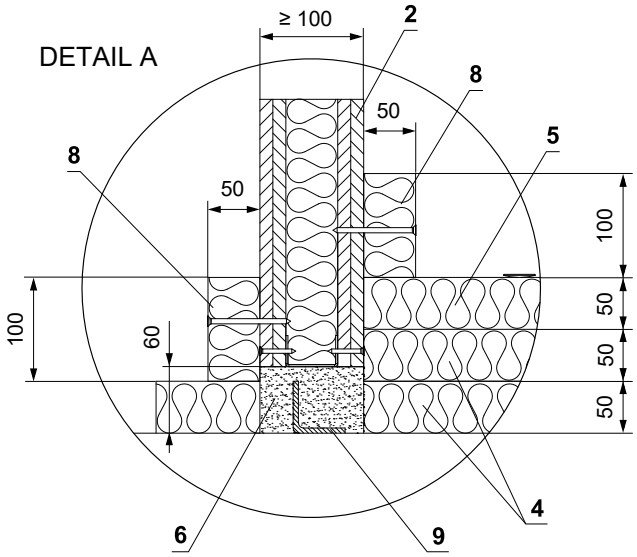

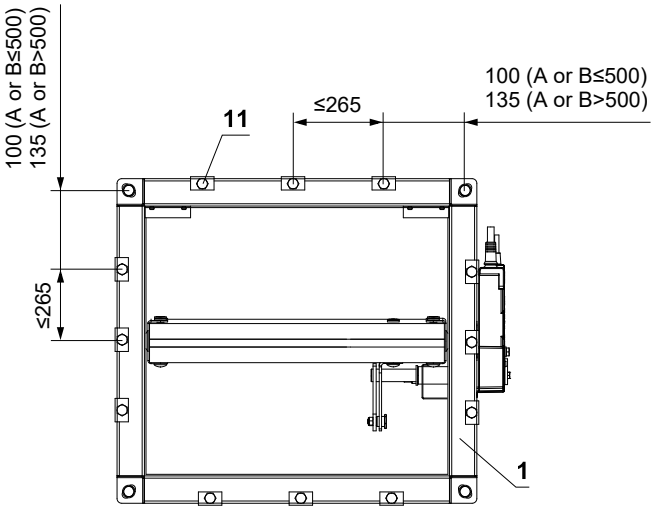

1 FDMQ 120
2 Gypsum wall construction
3 Flamebar EN fire Duct - made of galvanised sheet metal, thickness is dependant on duct size, type BW18 fire sprayed with Flamebar BW18 (insulated duct), type BW11 fire sprayed with Flamebar BW11 (not insulated duct)
4 Insulation - two layers of stone wool FPL 110 SLAB, thickness 2x 50 mm, density 105 kg/m³, the second layer of insulation is provided with aluminium foil on the outside (FPL 110 FOIL FACED SLAB) - visible edges of mineral wool are covered with self-adhesive aluminium tape
5 Insulation collar - additional insulation of the fire damper and gypsum wall construction - third layer of insulation FPL 110 FOIL FACED SLAB, thickness 50 mm and width 600 mm
6 Filling - FPL 110 mineral wool - fill the gap between the duct and the wall
7 Fixing profile with threaded rod → see pages 48 to 51
8 Penetration insulation pattress - FPL 110 FOIL FACED SLAB, thickness 50 mm - glued with Idenden 10-450 and fixed with screws to the wall construction
9 Reinforcement of the duct - steel L-profile 50x50x5 mm or flange to Flamebar spec. on all sides of the duct within 100 mm of the wall
10 Insulation pins - riveted to the duct - after the insulation boards are pushed over the insulation pins, secure the ends with disc plates in each insulation layer
11 Steel clamp - flange connection with Flamebar G-Clamps with M8 bolts, max. spacing 200 mm
12 Bolt assembly - flange connection at corners - M10 bolt and nut
13 VRM-Q 120 → see page 60
14 Sealing - all joints between duct segments are insulated with Flamebar Fibre Gasket self-adhesive tape and Flamebar Intumescent Sealant

Installation in sandwich wall construction

In sandwich wall construction EUROCLAD - Ablative Coated Batt with fire-resistant boards **EI 120 (v_e) S [H]**

- For connection following duct → see page 52

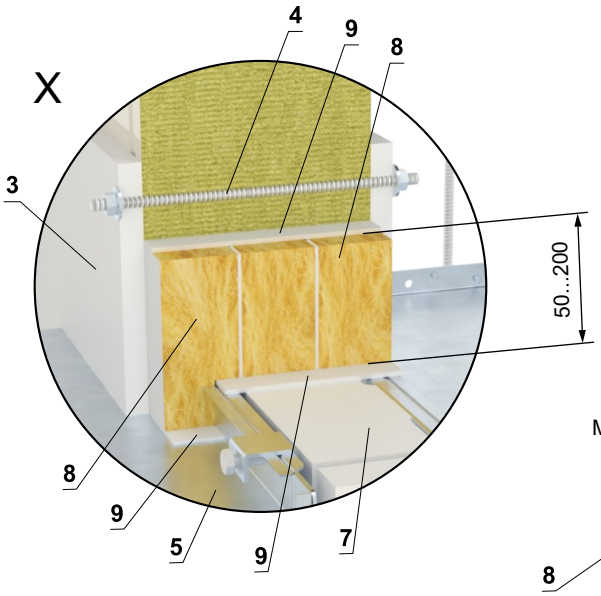

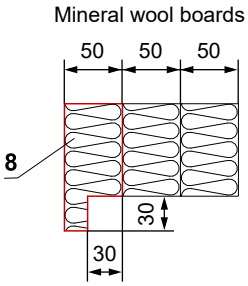

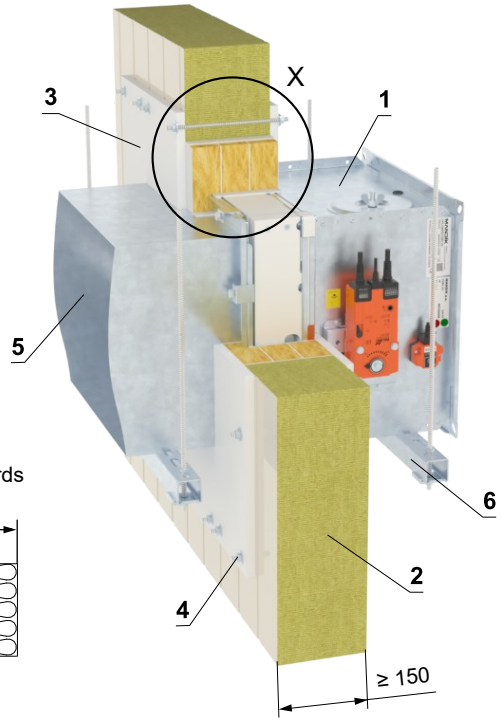

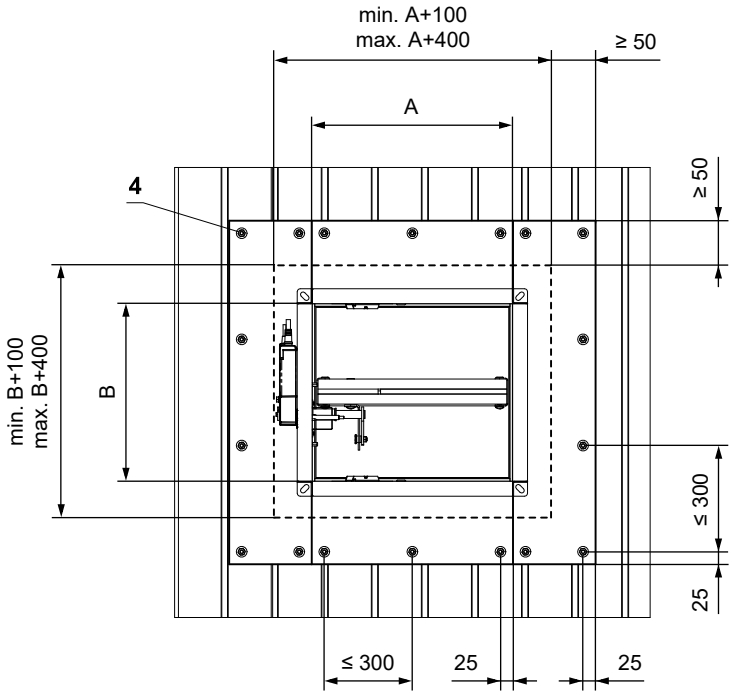

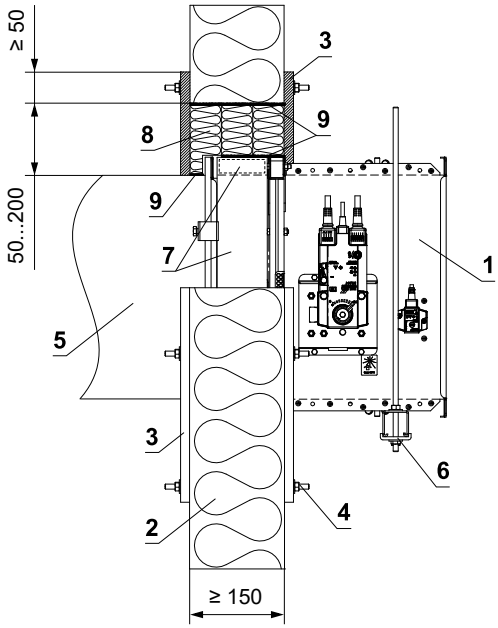

* HILTI system can be replaced by a similar system with the same or higher thickness, density, fire reaction class, tested according to EN 1366-3.

1 FDMQ 120
2 Sandwich wall construction - min. th. 150 mm (Euroclad Firemaster Extra)
3 Fire-resistant board - min. th. 15 mm, min. density 870 kg/m³ (e.g. PROMATECT-H)
4 Fixing connection of boards - threaded rod M8 (length of the threaded rod for 150 mm sandwich construction is min. 220 mm, 2 pcs large washer M8, 2 pcs nut M8). The boards must be tightly fixed to the sandwich wall construction!
5 Duct
6 Profile with threaded rod → see pages 48 to 51
7 Protective cladding board - min. th. 30 mm, min. density 750 kg/m³ (e.g. PROMATECT-MST) → see page 61
Ablative Coated Batt System HILTI*
8 Mineral wool board - min. density 140 kg/m³ (HILTI CFS-CT B 1S 140/50...)
9 Fire-resistant mastic - (HILTI CFS-S ACR...) fill the gap from both sides of the fire separation construction and around the perimeter of penetration and damper casing

Installation in shaft wall construction

In shaft wall construction - mortar or gypsum

- For connection following duct → see page 52
- Damper can be installed on either side of the wall.
- It is possible to use e.g. wall type A306030, A306035… from www.british-gypsum.com or RNS 121, RNS 122… from www.siniat.co.uk
- It is possible to use walls that have the same or greater thickness and density of boards than the walls listed below (more layers of boards can also be used)
- Follow the instructions of the shaft wall manufacturer.

EI 120 (v_e) S [H]

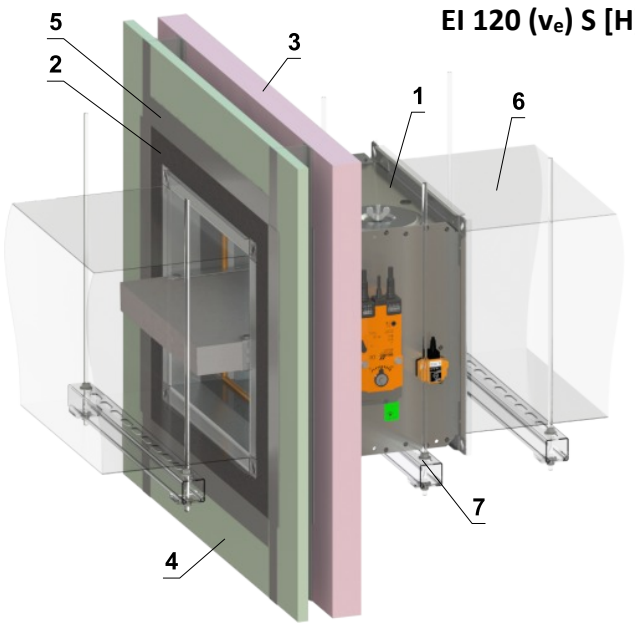

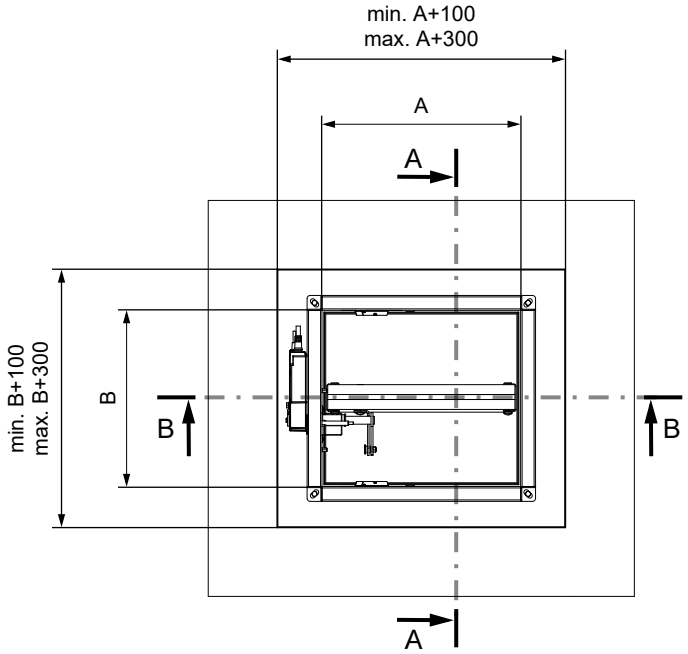

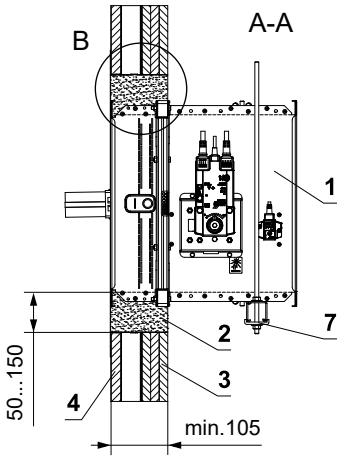

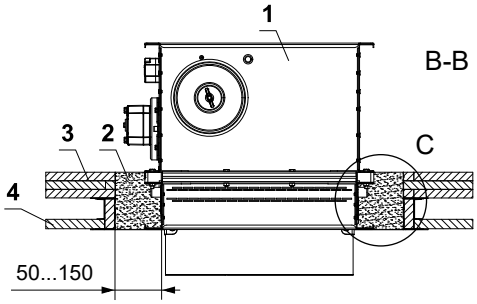

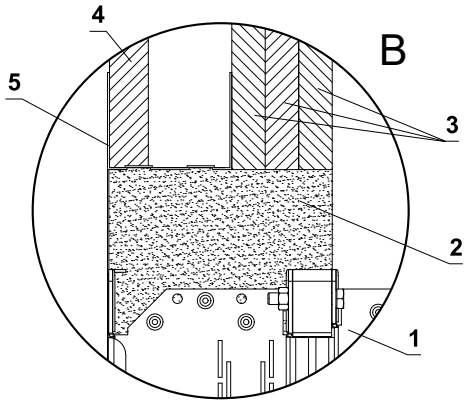

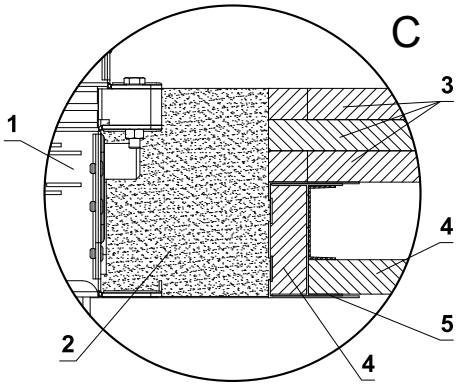

1 FDMQ 120
2 Mortar or gypsum
3 Plasterboard EN 520 - Type F - min. 3x15 mm
4 Plasterboard EN 520 - Type F - min. 1x19 mm
5 Plasteboard profile
6 Duct
7 Profile with threaded rod → see pages 48 to 51

In shaft wall construction - 2 dampers in one opening - mortar or gypsum

EI 120 (v_e) S [H]

- For connection following duct → see page 52
- Damper can be installed on either side of the wall.
- It is possible to use e.g. wall type A306030, A306035… from www.british-gypsum.com
- It is possible to use walls that have the same or greater thickness and density of boards than the walls listed below (more layers of boards can also be used)
- Follow the instructions of the shaft wall manufacturer.

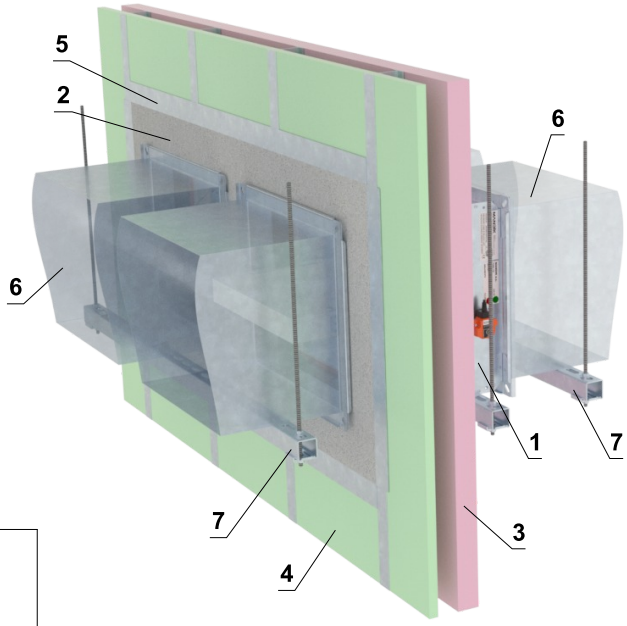

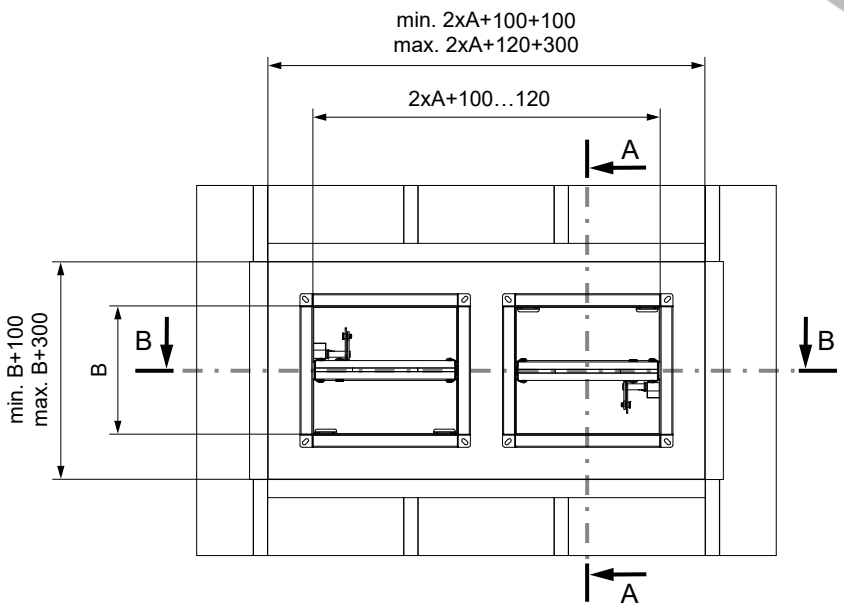

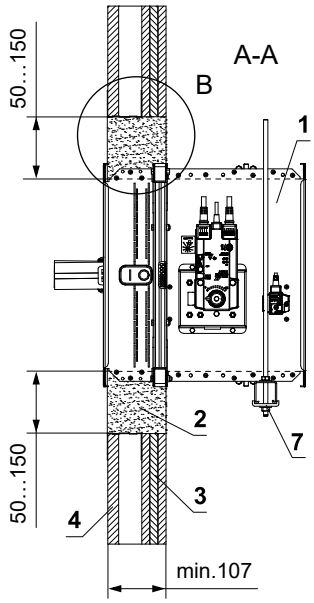

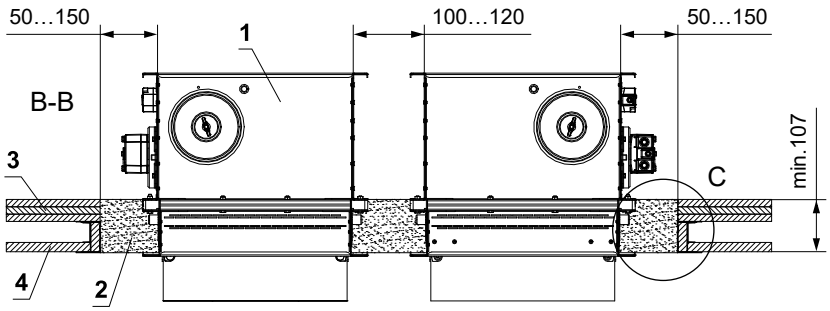

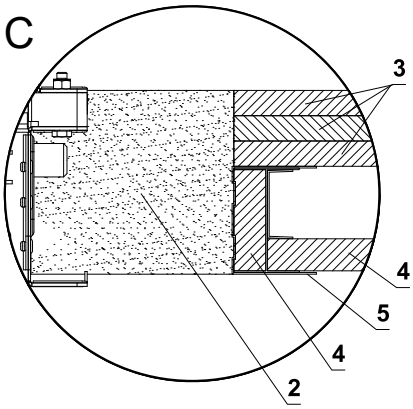

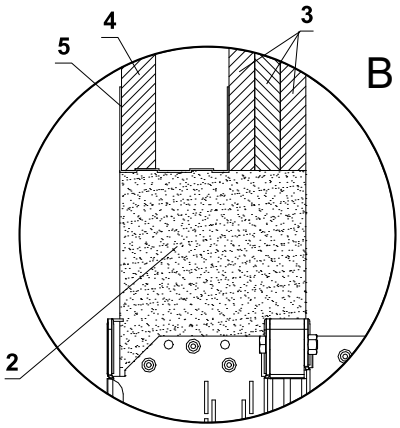

1 FDMQ 120
2 Mortar or gypsum
3 Plasterboard EN 520 - Type F - min. 3x15 mm
4 Plasterboard EN 520 - Type F - min. 1x19 mm
5 Plasteboard profile
6 Duct
7 Profile with threaded rod → see pages 48 to 51

In shaft wall construction - 2 dampers in one opening - Ablative Coated Batt

EI 120 (v_e) S [H]

- For connection following duct → see page 52
- Damper can be installed on either side of the wall.
- It is possible to use e.g. wall type A306030, A306035… from www.british-gypsum.com
- It is possible to use walls that have the same or greater thickness and density of boards than the walls listed below (more layers of boards can also be used)
- Follow the instructions of the shaft wall manufacturer.

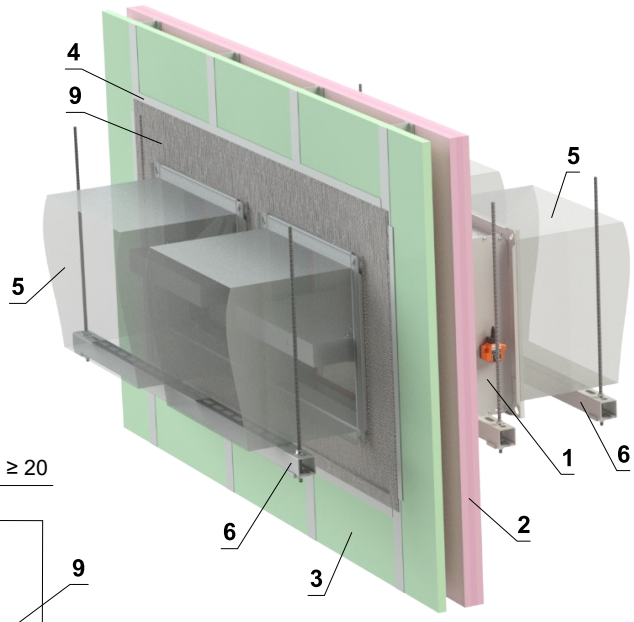

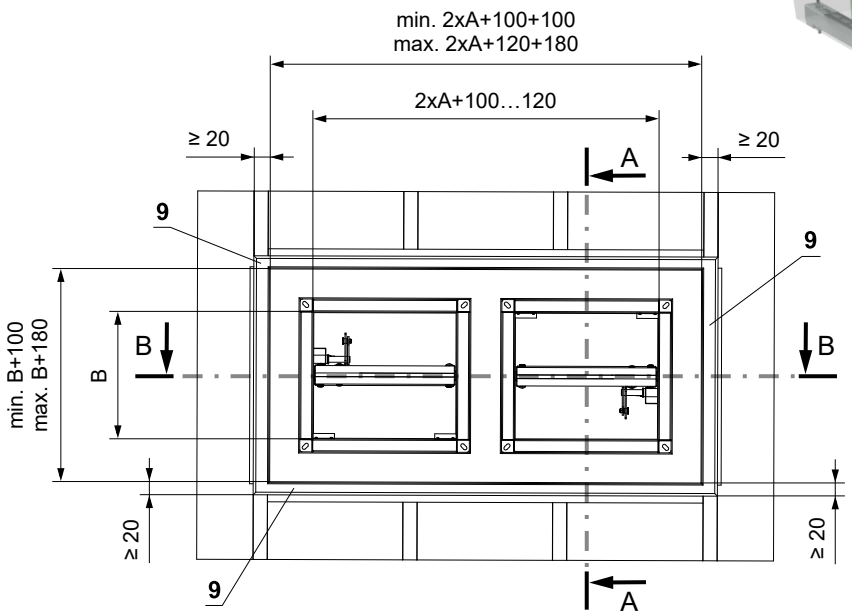

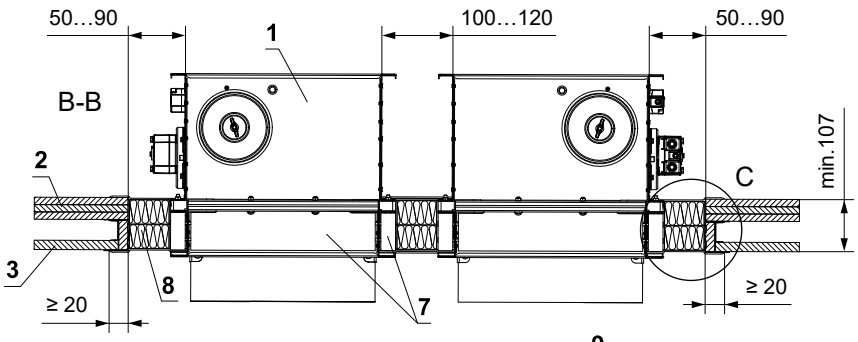

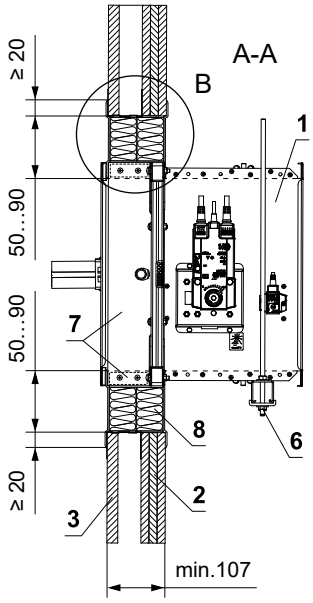

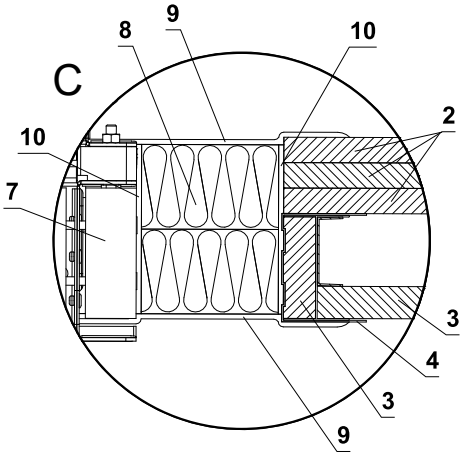

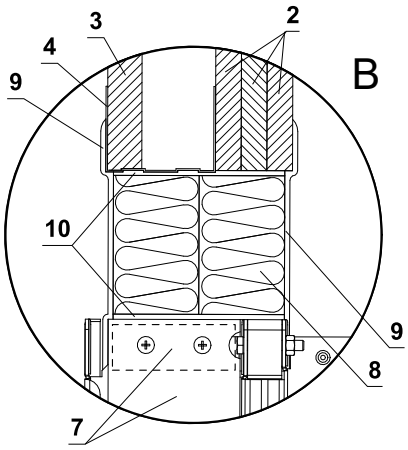

* HILTI system can be replaced by a similar system with the same or higher thickness, density, fire reaction class, tested according to EN 1366-3.

1 FDMQ 120
2 Plasterboard EN 520 - Type F - min. 3x15 mm
3 Plasterboard EN 520 - Type F - min. 1x19 mm
4 Plasteboard profile
5 Duct
6 Profile with threaded rod → see pages 48 to 51
7 Protective cladding board - min. th. 30 mm, min. density 750 kg/m³ (e.g. PROMATECT-MST) → see page 61
Ablative Coated Batt System HILTI*
8 Mineral wool board - min. density 140 kg/m³ (HILTI CFS-CT B 1S 140/50...)
9 Fire stop coating - th. 1 mm (HILTI CFS-CT...) - coating is overcoated on the support construction and on the damper casing/duct
10 Fire-resistant mastic - (HILTI CFS-S ACR...) fill the gap from both sides of the fire separation construction and around the perimeter of penetration and damper casing

Installation in solid ceiling construction

In solid ceiling construction - mortar or gypsum

EI 120 (h_o) S [H] - 500 Pa

- For connection following duct → see page 52
- The damper can be installed from both sides of the construction, i.e. from the top or the bottom side of the ceiling.

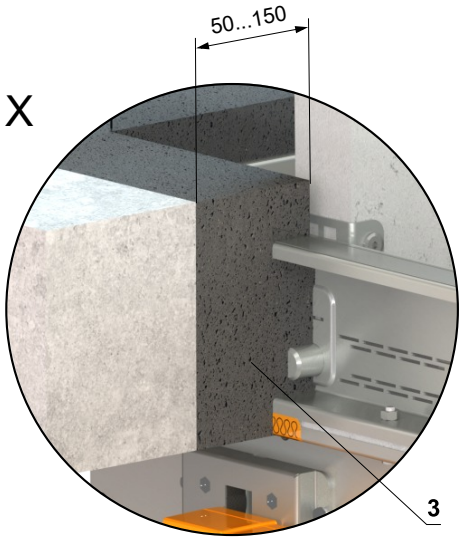

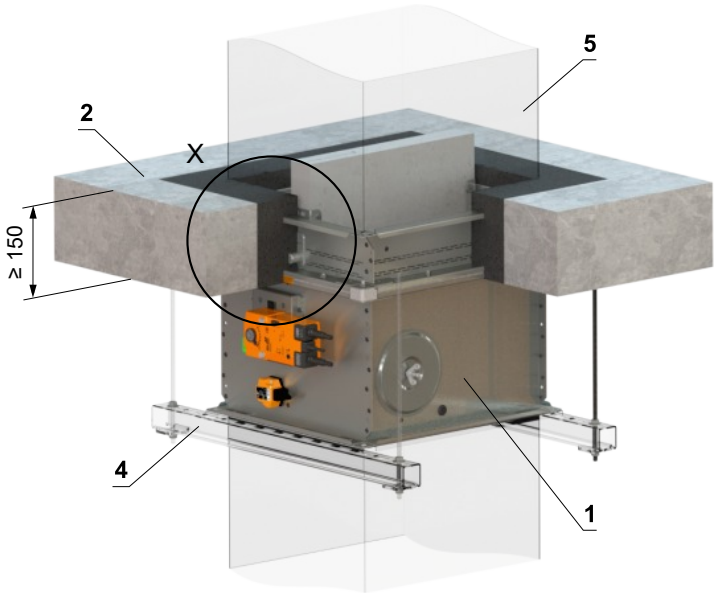

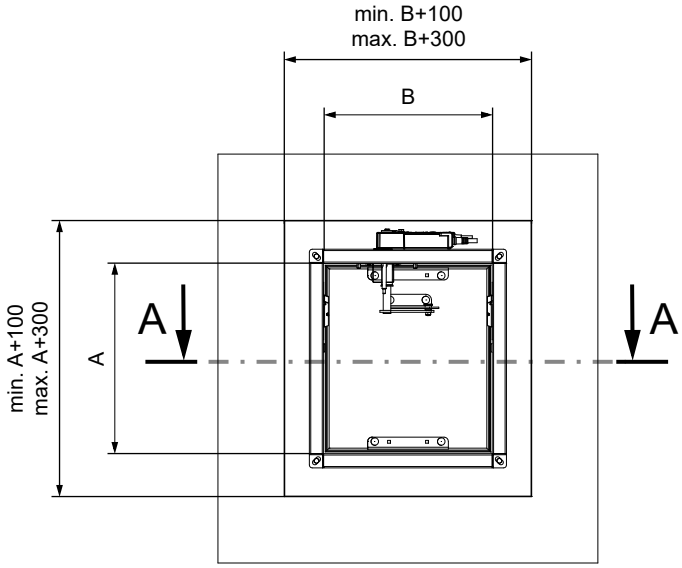

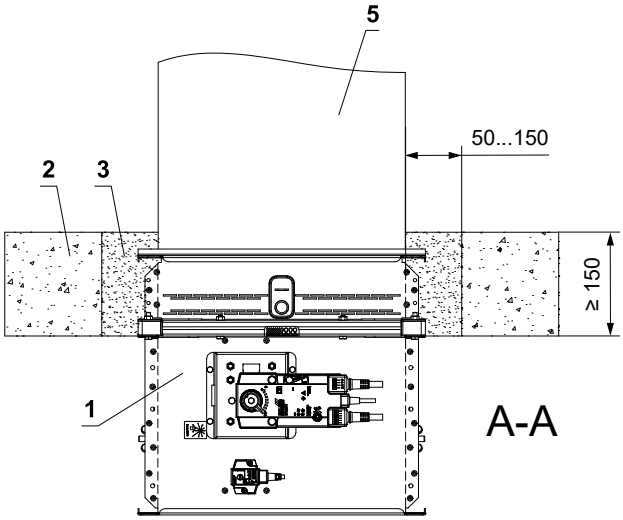

1 FDMQ 120
2 Solid ceiling construction
3 Mortar or gypsum
4 Profile with threaded rod → see pages 48 to 51
5 Duct

In solid ceiling construction - 2 dampers in battery - mortar or gypsum

EI 120 (h_o) S [H]

- The damper can be installed from both sides of the construction, i.e. from the top or the bottom side of the ceiling.

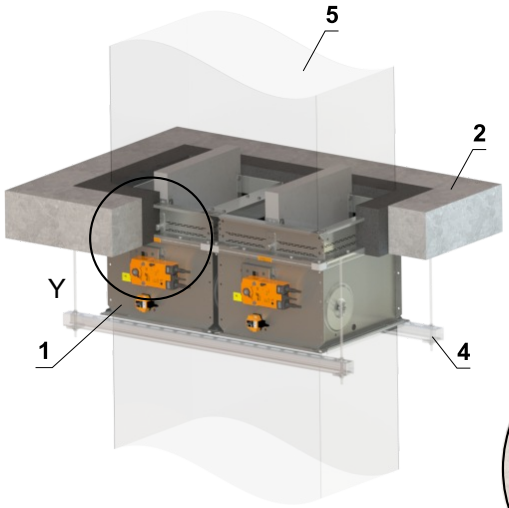

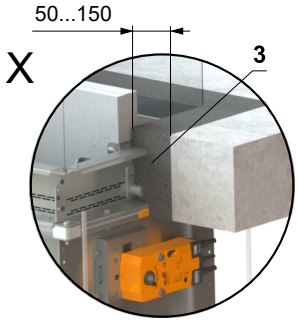

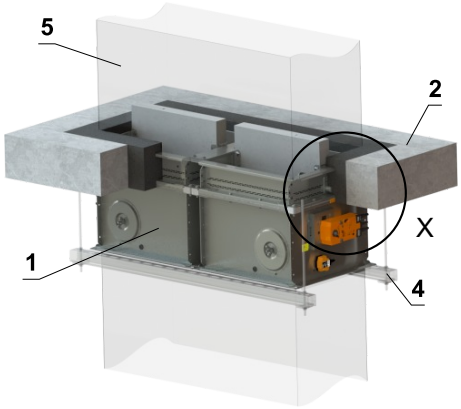

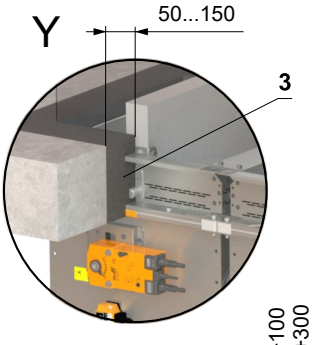

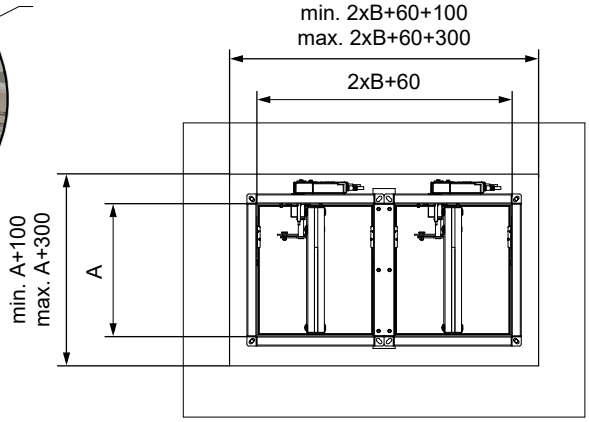

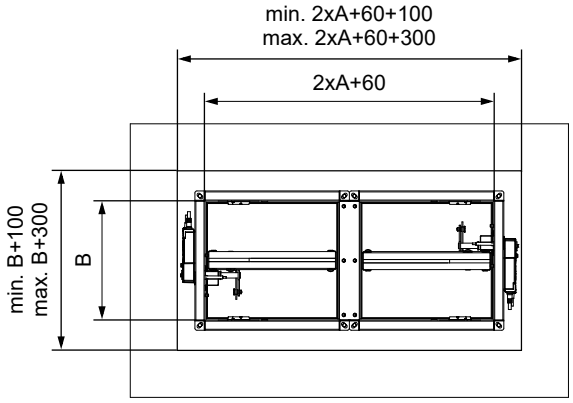

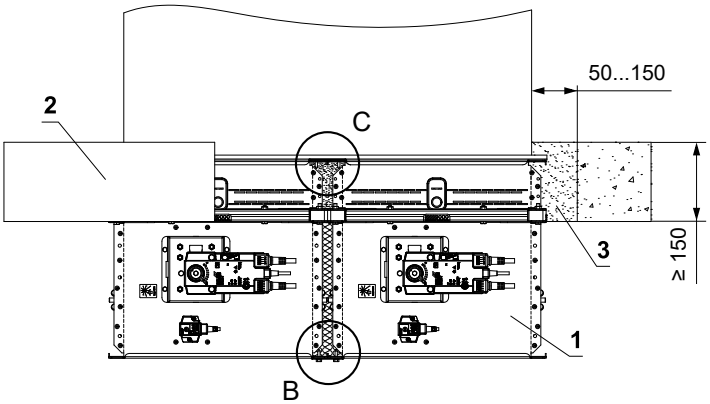

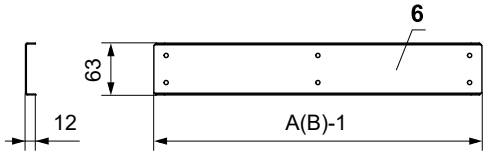

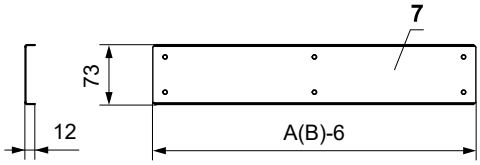

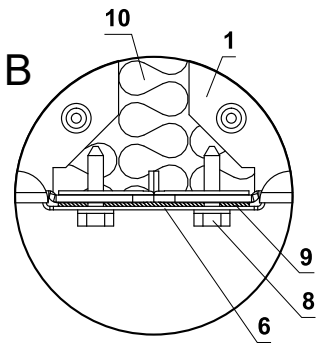

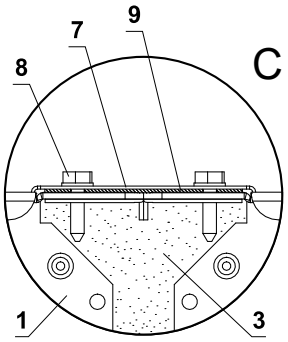

1 FDMQ 120
2 Solid ceiling construction
3 Mortar or gypsum
4 Profile with threaded rod → see pages 48 to 51
5 Duct
6 U-profile type 3
7 U-profile type 1
8 Screw TEK 4,8x18 mm (span ≤ 200 mm)
9 Sealing
10 Insulation board made of mineral wool - recommended for easy filling of gap with mortar/gypsum.

- For connection following duct → see page 52
- Gap between damper and construction is filled by mortar or gypsum

In solid ceiling construction - 4 dampers in battery - mortar or gypsum

EI 120 (h_o) S [H]

- The damper can be installed from both sides of the construction, i.e. from the top or the bottom side of the ceiling.

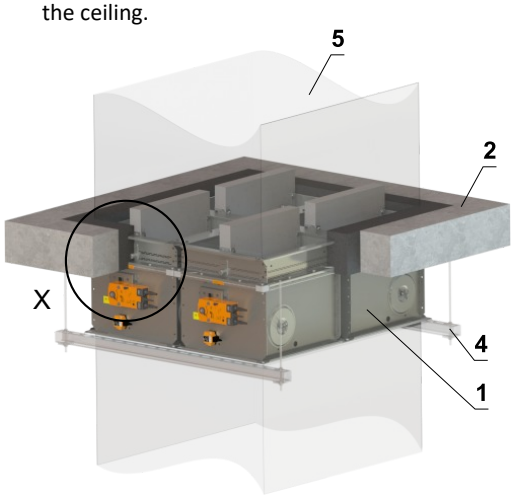

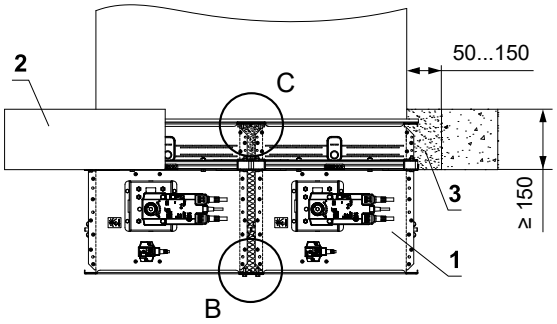

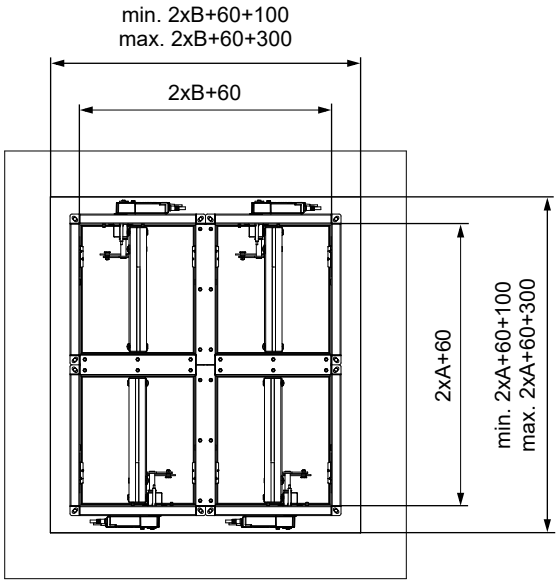

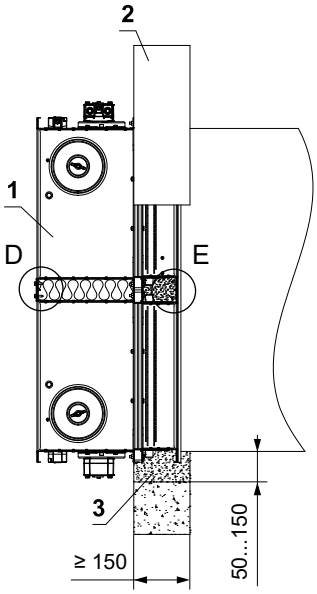

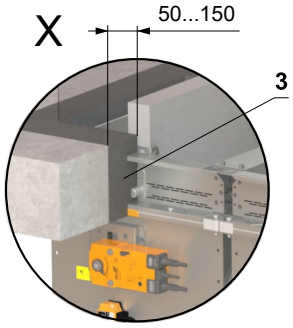

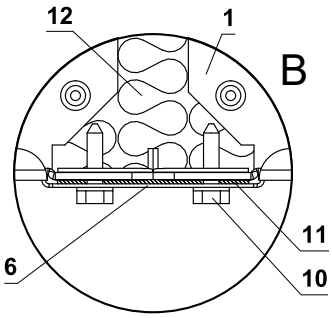

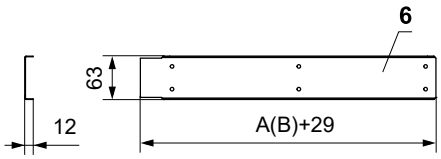

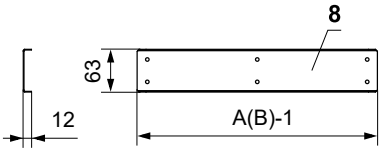

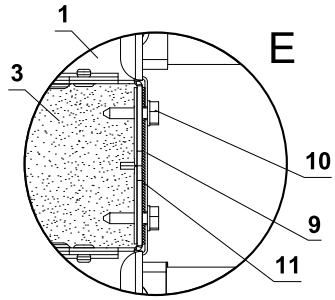

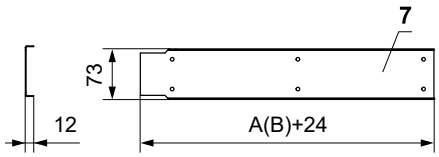

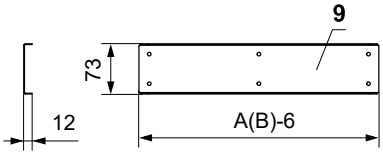

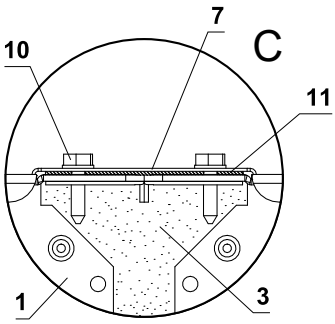

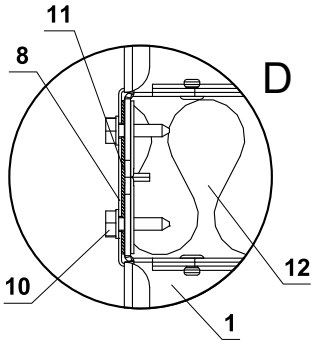

1 FDMQ 120
2 Solid ceiling construction
3 Mortar or gypsum
4 Profile with threaded rod → see pages 48 to 51
5 Duct
6 U-profile type 2
7 U-profile type 4
8 U-profile type 1
9 U-profile type 3
10 Screw TEK 4,8x18 mm (span ≤ 200 mm)
11 Sealing
12 Insulation board made of mineral wool - recommended for easy filling of gap with mortar/gypsum.

- For connection following duct → see page 52
- Gap between damper and construction is filled by mortar or gypsum

V. SUSPENSION SYSTEMS

Mounting to the ceiling wall

- The dampers must be suspended using threaded rods and mounting profiles. Their dimensioning depend on the weight of the damper.
- The dampers and the duct must be suspended separately.
- Following air-conditioning duct must be suspended or supported so that all load transfer from the following duct to the damper flanges is absolutely excluded. Adjacent duct must be suspended or supported, as required by the duct suppliers.

Examples of anchoring to the ceiling construction
Follow the instructions of fixing specialist or installation company

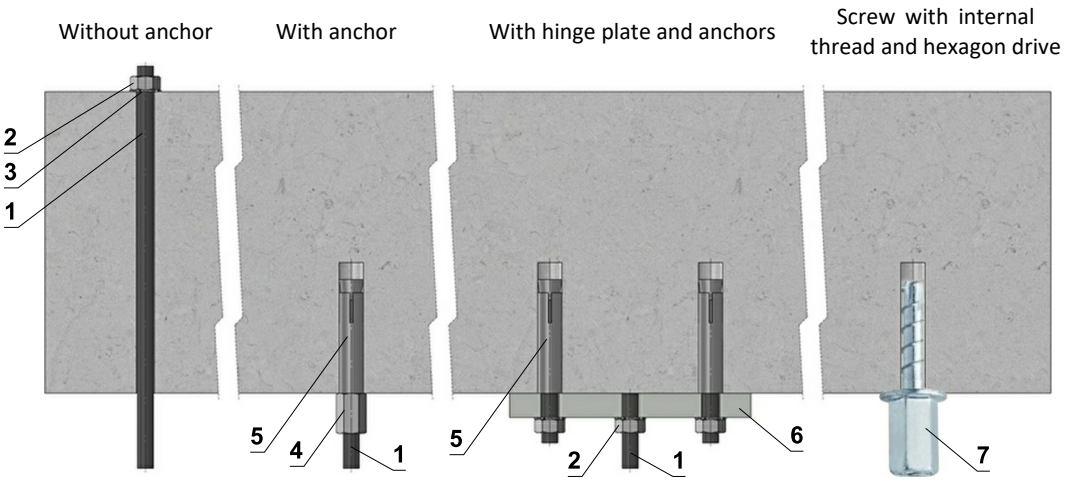

Hinge plates

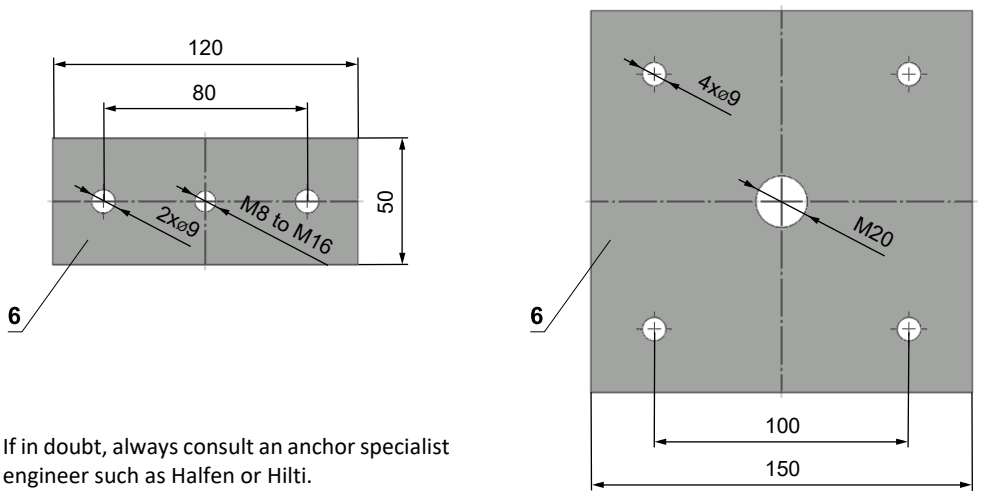

- If in doubt, always consult an anchor specialist engineer such as Halfen or Hilti.

1 Threaded rod M8 - M20
2 Nut M8 - M20
3 Washer for M8 - M20
4 Coupling Nut M8 - M20
5 Anchor
6 Hinge plate - min. thickness 10 mm
7 Concrete screw tested for fire resistance R30-R90, max. Tension up to 0.75 KN (length 35 mm)

Load capacities of threaded rods at the required fire resistance 60 min. < t ≤ 120 min.

Size	As [mm²]	Weight [kg]	
		for 1 rod	for 2 rods
M8	36,6	22	44
M10	58	35	70
M12	84,3	52	104
M16	157	96	192
M18	192	117	234
M20	245	150	300

Example of placing of mounting profiles HILTI

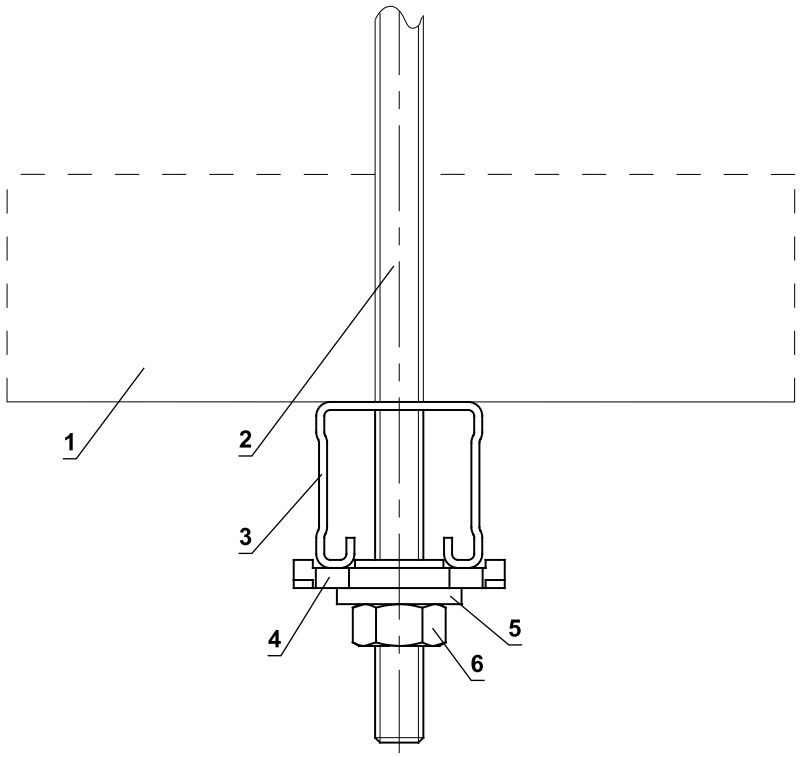

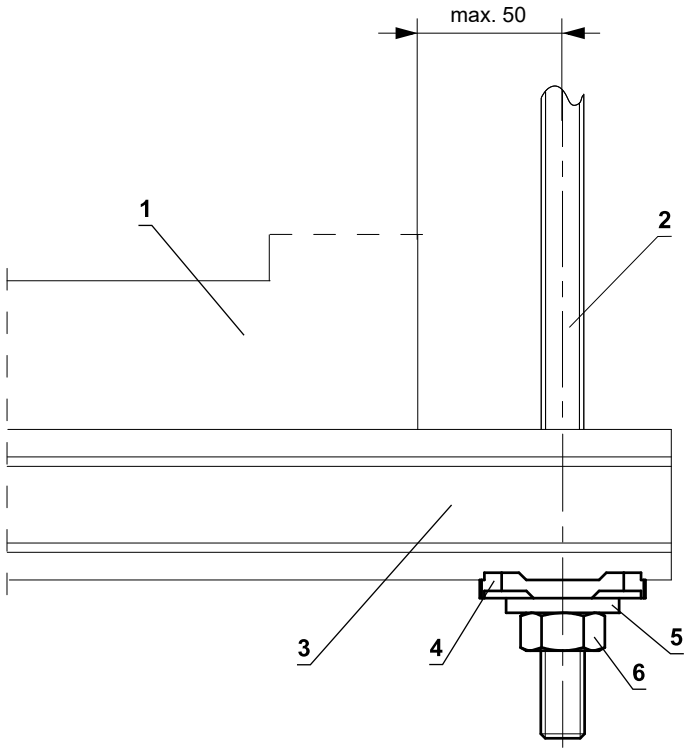

1 FDMQ 120
2 Threaded rod M8 - M12
3 Support HILTI MQ-41 or MQ-41/3
4 Bored plate HILTI MQZ-L
5 Washer for M8 - M12
6 Nut M8 - M12

Example of fixing FDMQ 120 to the wall

In solid wall construction

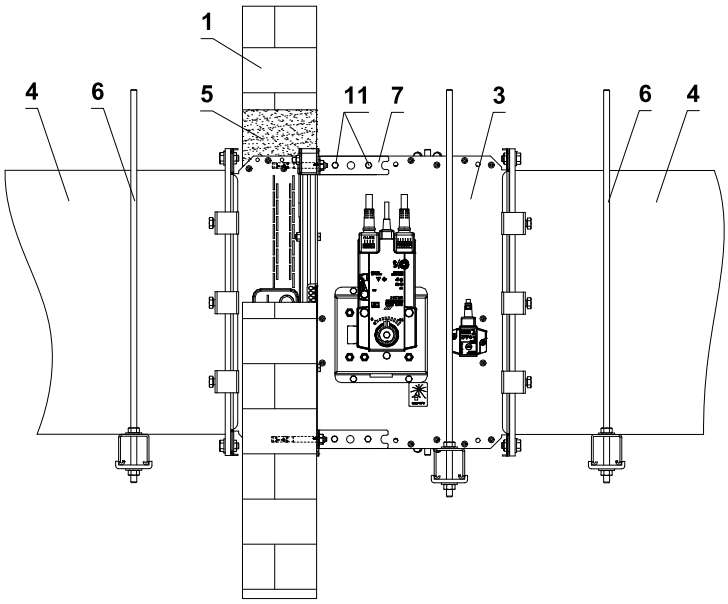

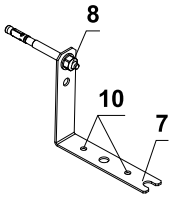

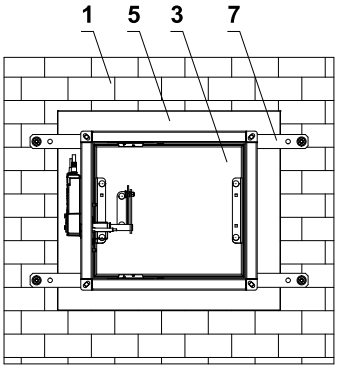

In gypsum wall construction

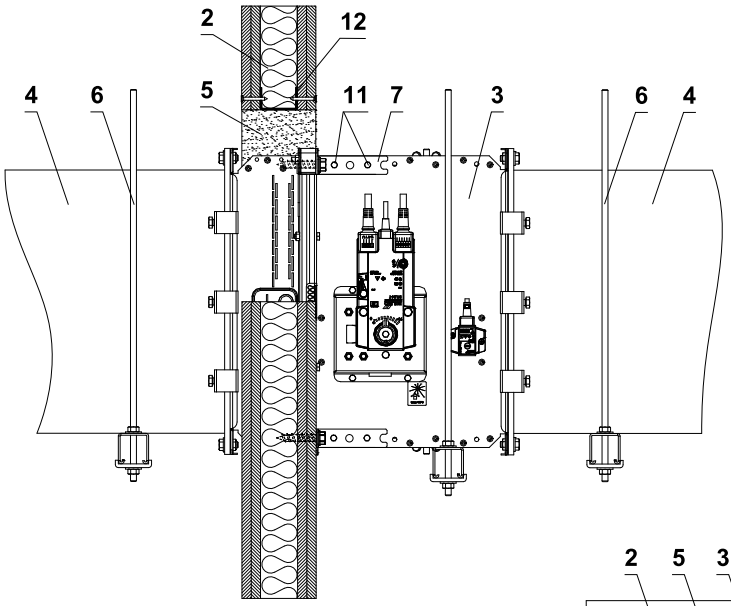

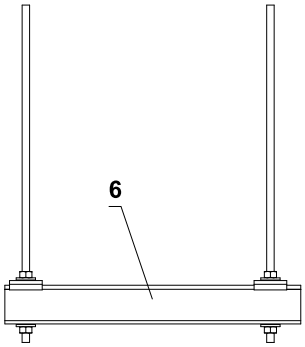

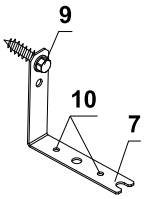

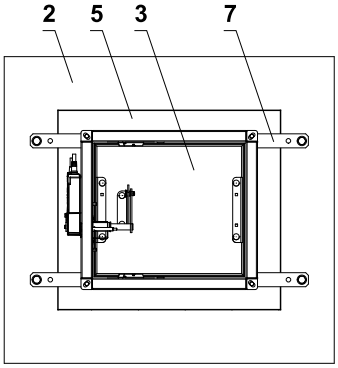

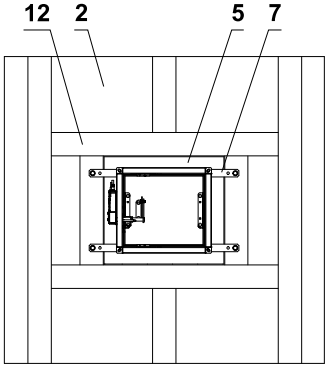

Grid from "U" profile

1 Solid wall construction
2 Gypsum wall construction
3 FDMQ 120
4 Duct
5 Penetration
6 Profile with threaded rod → see page 49
7 Fixing element/steel holder for connecting damper to the wall (optional accessories MANDIK, a.s. or sheet metal min. thickness 2 mm and min. width 60 mm)
8 Nut M8 with anchor
9 Hexagon head screw
10 Installation holes
11 Screw assembly M6 (screw M6x10, nut M6)
12 Gypsum grid from "U" profile

- The method of attachment must follow the minimum requirements for attachment and connection of ductwork in accordance with national regulations. Also, the elements can be suspended from the top, or supported from bottom, or fastened from the side.

Example of fixing FDMQ 120 to the ceiling

In solid ceiling construction

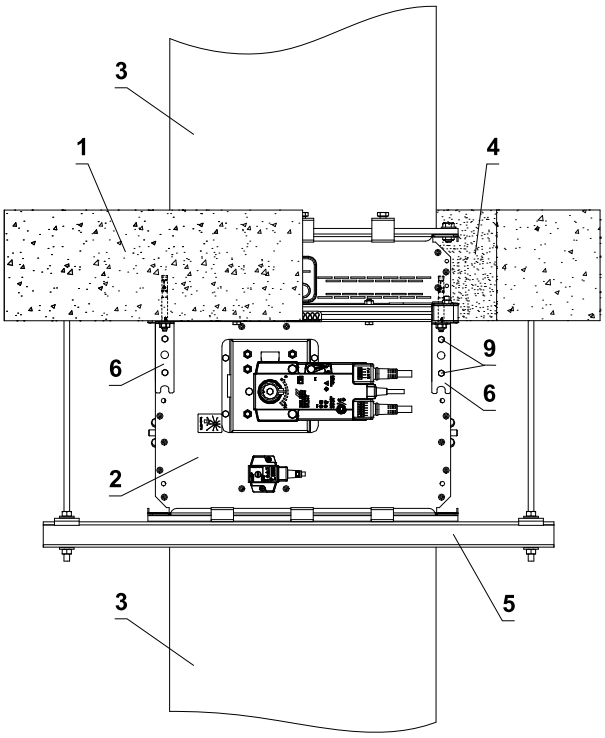

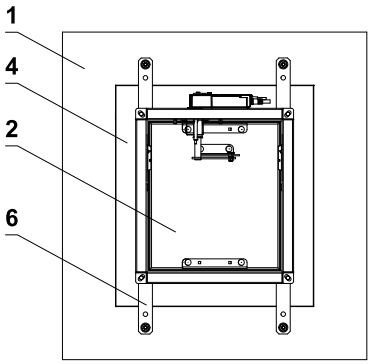

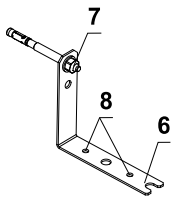

1 Solid ceiling construction
2 FDMQ 120
3 Duct
4 Penetration
5 Profile with threaded rod → see page 49
6 Fixing element/steel holder for connecting damper to the ceiling (optional accessories MANDIK, a.s. or sheet metal min. thickness 2 mm and min. width 60 mm)
7 Nut M8 with anchor
8 Installation holes
9 Screw assembly M6 (screw M6x10, nut M6)

- The method of attachment must follow the minimum requirements for attachment and connection of ductwork in accordance with national regulations. Also, the elements can be suspended from the top, or supported from bottom, or fastened from the side.

Example of duct connection

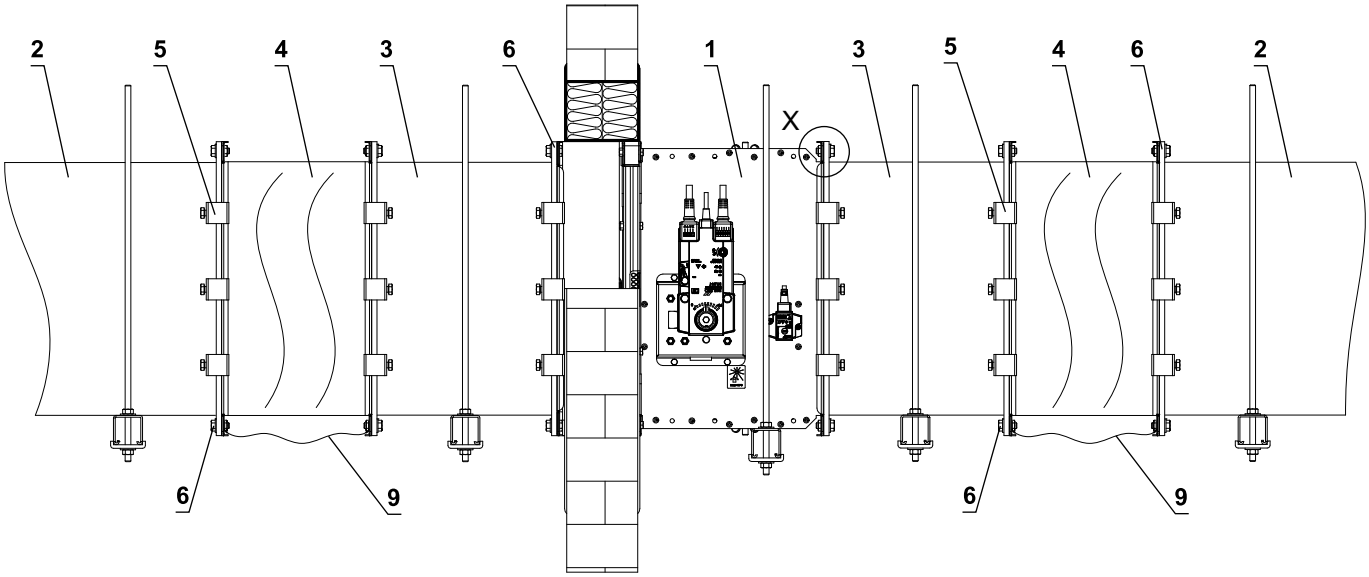

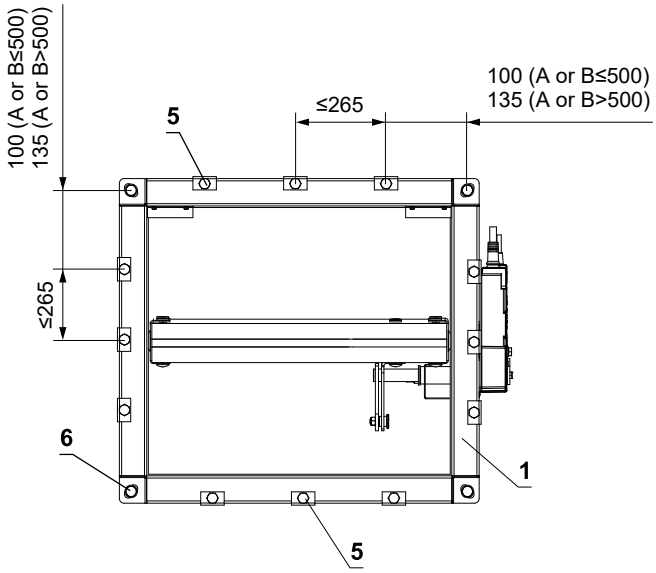

Electrically conductive connection

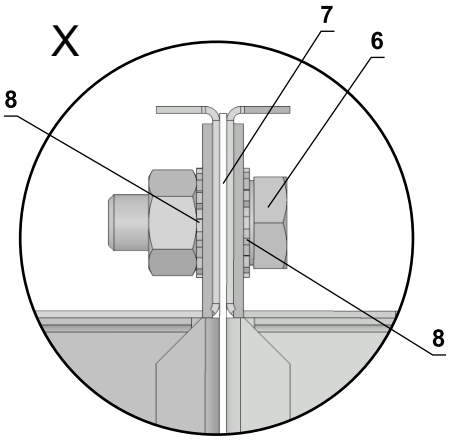

* min. one connection must be electrically conductive

1 FDMQ 120
2 Duct
3 Extension piece (if required)
4 Damping pad
5 Steel clamp min. screw M8
6 Screw assembly M8 (screw M8x20 mm, 2 pcs toothed lock washer M8, nut M8) *
7 Sealing
8 Toothed lock washer M8
9 Protective bonding conductor

VI. TECHNICAL DATA

Pressure loss

Pressure loss calculation

$$\Delta p = \xi \cdot \rho \cdot \frac{w^2}{2}$$

Δp	[Pa]	pressure loss
w	[m/s]	air flow speed in nominal damper section
ρ	[kg/m³]	air density
ξ	[-]	coefficient of local pressure loss for the nominal damper section → see page 54

Determination of pressure loss by using diagram ρ = 1,2 kg/m³

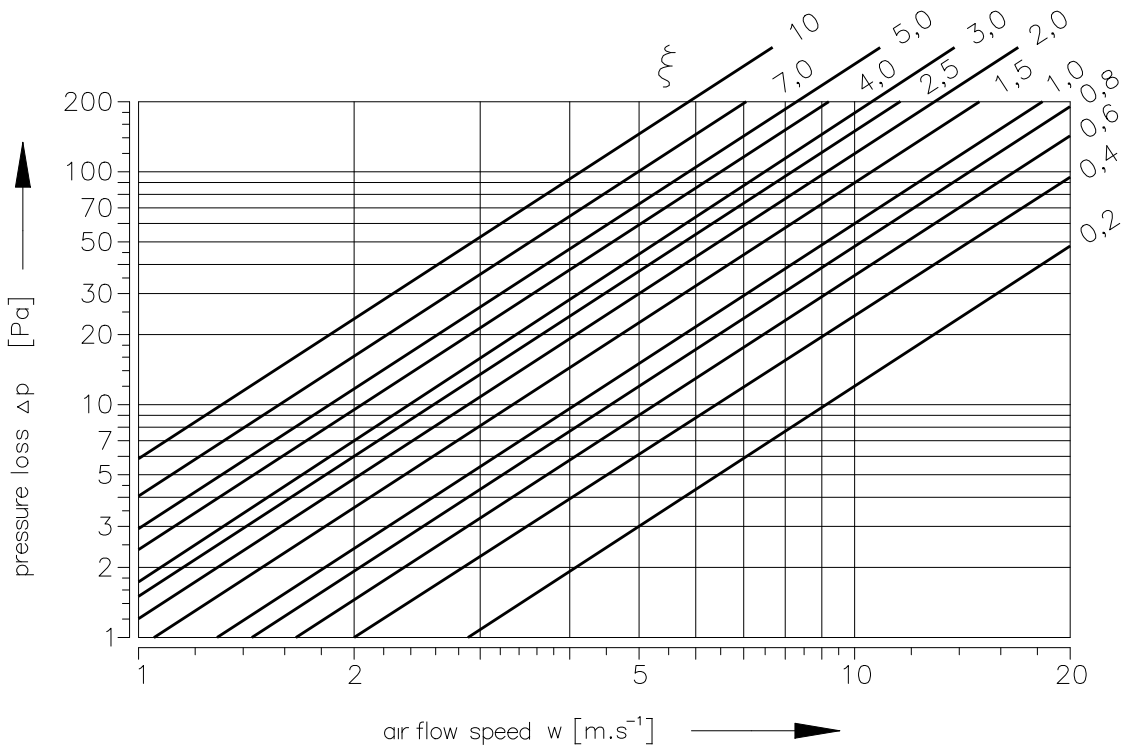

Coefficient of local pressure loss

	A													
B	**150**	**180**	**200**	**225**	**250**	**280**	**300**	**315**	**355**	**400**	**450**	**500**	**550**	**560**
150	3,522	3,307	3,081	2,980	2,850	2,704	2,629	2,510	2,421	2,326	2,252	2,187	2,166	2,139
180	2,557	2,389	2,236	2,153	2,064	1,962	1,889	1,802	1,727	1,664	1,610	1,569	1,547	1,529
200	1,972	1,843	1,723	1,653	1,590	1,502	1,451	1,383	1,325	1,276	1,235	1,201	1,186	1,172
225	1,522	1,465	1,321	1,197	1,173	1,141	1,106	1,067	1,015	0,964	0,948	0,917	0,891	0,881
250	1,249	1,164	1,083	1,044	1,008	0,952	0,902	0,867	0,828	0,799	0,772	0,752	0,739	0,732
280	1,133	1,032	1,002	0,960	0,926	0,881	0,827	0,781	0,728	0,705	0,685	0,673	0,665	0,650
300	1,041	0,947	0,896	0,861	0,823	0,775	0,729	0,677	0,648	0,635	0,601	0,592	0,587	0,584
315	0,865	0,803	0,749	0,724	0,693	0,658	0,618	0,595	0,569	0,546	0,527	0,513	0,503	0,499
355	0,735	0,684	0,638	0,609	0,585	0,556	0,528	0,506	0,483	0,464	0,448	0,436	0,428	0,424
400	0,640	0,596	0,555	0,529	0,509	0,481	0,463	0,439	0,420	0,402	0,389	0,377	0,371	0,367
450	0,567	0,527	0,490	0,470	0,452	0,430	0,405	0,387	0,370	0,355	0,343	0,332	0,330	0,324
500	0,514	0,478	0,443	0,426	0,413	0,387	0,369	0,350	0,334	0,321	0,310	0,301	0,298	0,293
550	0,490	0,455	0,421	0,405	0,390	0,367	0,344	0,326	0,317	0,300	0,289	0,287	0,278	0,275
560	0,469	0,434	0,404	0,390	0,371	0,349	0,334	0,318	0,303	0,291	0,281	0,273	0,270	0,266
600	0,439	0,409	0,384	0,368	0,355	0,333	0,316	0,301	0,289	0,281	0,270	0,259	0,253	0,244
630	0,429	0,398	0,370	0,357	0,343	0,322	0,306	0,291	0,278	0,267	0,257	0,250	0,237	0,243
650	–	0,379	0,356	0,342	0,329	0,309	0,297	0,284	0,266	0,257	0,250	0,240	0,229	0,233
700	–	0,375	0,348	0,333	0,321	0,306	0,289	0,275	0,262	0,250	0,244	0,234	0,222	0,221
710	–	0,368	0,343	0,329	0,316	0,300	0,285	0,268	0,257	0,247	0,237	0,230	0,219	0,219
750	–	0,354	0,330	0,321	0,309	0,286	0,271	0,260	0,246	0,238	0,230	0,222	0,219	0,215
800	–	0,344	0,320	0,309	0,297	0,282	0,264	0,251	0,239	0,229	0,221	0,215	0,211	0,209

	A												
B	**600**	**630**	**650**	**700**	**710**	**750**	**800**	**900**	**1000**	**1100**	**1250**	**1400**	**1500**
150	2,112	2,091	2,083	2,067	2,062	2,044	2,029	1,992	1,972	–	–	–	–
180	1,513	1,495	1,480	1,469	1,462	1,449	1,436	1,412	1,394	1,377	1,363	1,348	1,340
200	1,154	1,144	1,131	1,123	1,120	1,109	1,099	1,080	1,066	1,053	1,040	1,031	1,024
225	0,874	0,861	0,841	0,833	0,824	0,817	0,810	0,795	0,785	0,775	0,758	0,744	0,740
250	0,725	0,714	0,705	0,704	0,698	0,693	0,685	0,673	0,665	0,656	0,648	0,641	0,638
280	0,645	0,641	0,617	0,612	0,606	0,601	0,593	0,585	0,576	0,563	0,549	0,540	0,530
300	0,569	0,554	0,550	0,549	0,548	0,541	0,532	0,524	0,507	0,496	0,490	0,488	0,480
315	0,493	0,487	0,481	0,479	0,476	0,470	0,467	0,459	0,452	0,447	0,442	0,436	0,434
355	0,419	0,414	0,408	0,405	0,404	0,399	0,397	0,389	0,384	0,379	0,374	0,370	0,368
400	0,363	0,358	0,352	0,351	0,350	0,345	0,343	0,336	0,331	0,327	0,324	0,321	0,318
450	0,319	0,315	0,311	0,310	0,309	0,306	0,301	0,296	0,293	0,289	0,286	0,281	0,280
500	0,288	0,285	0,284	0,281	0,279	0,276	0,273	0,268	0,264	0,261	0,258	0,256	0,254
550	0,272	0,269	0,264	0,259	0,256	0,254	0,253	0,248	0,245	0,242	0,237	0,234	0,232
560	0,264	0,259	0,256	0,255	0,253	0,250	0,248	0,244	0,240	0,236	0,233	0,231	0,230
600	0,242	0,241	0,239	0,238	0,237	0,233	0,228	0,226	0,222	0,219	0,216	0,214	0,212
630	0,240	0,237	0,234	0,233	0,232	0,229	0,226	0,223	0,220	0,217	0,213	0,211	0,209
650	0,230	0,227	0,225	0,223	0,222	0,219	0,216	0,210	0,208	0,206	0,201	0,198	0,196
700	0,219	0,219	0,218	0,217	0,215	0,213	0,211	0,207	0,204	0,202	0,199	0,196	0,194
710	0,217	0,217	0,216	0,215	0,214	0,212	0,209	0,205	0,201	0,199	0,197	0,195	0,193
750	0,211	0,208	0,206	0,205	0,204	0,203	0,201	0,197	0,193	0,189	0,187	0,185	0,183
800	0,206	0,203	0,201	0,200	0,199	0,197	0,194	0,191	0,188	0,186	0,183	0,182	0,181

Noise data

Level of acoustic output corrected with filter A

$$L_{WA} = L_{W1} + 10 \log(S) + K_A$$

L_{WA}	[dB(A)]	level of acoustic output corrected with filter A
L_{W1}	[dB]	level of acoustic output L_{W1} related to the 1 m^2 section
S	[m^2]	duct cross section
K_A	[dB]	correction to the weight filter A

Level of acoustic output in octave ranges

$$L_{Woct} = L_{W1} + 10 \log(S) + L_{rel}$$

L_{Woct}	[dB]	spectrum of acoustic output in octave range
L_{W1}	[dB]	level of acoustic output L_{W1} related to the 1 m^2 section
S	[m^2]	duct cross section
L_{rel}	[dB]	relative level expressing the shape of the spectrum

Tables of acoustics values

Level of acoustic output L_{W1}[dB] related to the 1 m^2 section

	ξ [-]																
w [m/s]	**0,2**	**0,3**	**0,4**	**0,5**	**0,6**	**0,7**	**0,8**	**0,9**	**1**	**1,5**	**2**	**2,5**	**3**	**4**	**5**	**8**	**10**
2	15,5	18,7	20,9	22,6	24	25,2	26,3	27,2	28	31,2	33,4	35,1	36,5	38,8	40,5	44,2	45,9
3	26,1	29,2	31,5	33,2	34,6	35,8	36,9	37,8	38,6	41,7	44	45,7	47,1	49,4	51,1	54,7	56,5
4	33,6	36,7	39	40,7	42,1	43,3	44,3	45,3	46,1	49,2	51,5	53,2	54,6	56,9	58,6	62,2	64
5	39,4	42,5	44,8	46,5	47,9	49,1	50,2	51,1	51,9	55	57,3	59	60,4	62,7	64,4	68	69,8
6	44,1	47,3	49,5	51,3	52,7	53,9	54,9	55,8	56,6	59,8	62	63,8	65,2	67,4	69,2	72,8	74,5
7	48,2	51,3	53,5	55,3	56,7	57,9	58,9	59,8	60,7	63,8	66,1	67,8	69,2	71,4	73,2	76,8	78,6
8	51,6	54,8	57	58,8	60,2	61,4	62,4	63,3	64,1	67,3	69,5	71,3	72,7	74,9	76,7	80,3	82
9	54,7	57,9	60,1	61,8	63,2	64,4	65,5	66,4	67,2	70,4	72,6	74,3	75,7	78	79,7	83,4	85,1
10	57,4	60,6	62,8	64,6	66	67,2	68,2	69,1	70	73,1	75,3	77,1	78,5	80,7	82,5	86,1	87,9
11	59,9	63,1	65,3	67,1	68,5	69,7	70,7	71,6	72,4	75,6	77,8	79,6	81	83,2	85	88,6	90,3
12	62,2	65,4	67,6	69,3	70,7	71,9	73	73,9	74,7	77,9	80,1	81,8	83,2	85,5	87,2	90,9	92,6

Correction to the weight filter A

w [m/s]	**2**	**3**	**4**	**5**	**6**	**7**	**8**	**9**	**10**	**11**	**12**
K_A [dB]	-15	-11,8	-9,8	-8,4	-7,3	-6,4	-5,7	-5	-4,5	-4	-3,6

Relative level expressing the shape of the spectrum L_{rel}

	f [Hz]							
w [m/s]	**63**	**125**	**250**	**500**	**1000**	**2000**	**4000**	**8000**
2	-4,5	-6,9	-10,9	-16,7	-24,1	-33,2	-43,9	-56,4
3	-3,9	-5,3	-8,4	-13,1	-19,5	-27,6	-37,4	-48,9
4	-3,9	-4,5	-6,9	-10,9	-16,7	-24,1	-33,2	-43,9
5	-4	-4,1	-5,9	-9,4	-14,6	-21,5	-30,0	-40,3
6	-4,2	-3,9	-5,3	-8,4	-13,1	-19,5	-27,6	-37,4
7	-4,5	-3,9	-4,9	-7,5	-11,9	-17,9	-25,7	-35,1
8	-4,9	-3,9	-4,5	-6,9	-10,9	-16,7	-24,1	-33,2
9	-5,2	-3,9	-4,3	-6,4	-10,1	-15,6	-22,7	-31,5
10	-5,5	-4	-4,1	-5,9	-9,4	-14,6	-21,5	-30
11	-5,9	-4,1	-4	-5,6	-8,9	-13,8	-20,4	-28,8
12	-6,2	-4,3	-3,9	-5,3	-8,4	-13,1	-19,5	-27,6

VII. MATERIAL, FINISHING

- Damper casings are made from galvanized sheet metal without further surface treatment.
- Damper blades are made from fire resistant asbestos free boards made of mineral fibres.
- Manual control have cover made of mechanically resistant and durable plastic and the other parts are galvanized without further surface treatment.
- Fusible links are made of sheet brass, thickness 0,5 mm.
- Fasteners and springs are galvanized.
- According to the customer's requirements, dampers can be made of stainless steel material.

  Specifications for stainless-steel design:

  - Class A2 – Food-grade stainless steel (AISI 304 – EN 1.4301)
  - Class A4 – Chemistry-grade stainless steel (AISI 316, 316L – EN 1.4401, EN 1.4404)

  The respective stainless steel is the material for all components that are located or entering the damper inner space; components outside the damper casing are typically from galvanised sheet metal (fasteners for mounting the actuator or manual control, mechanical components except Item 4), frame components.

  The following components, including the fasteners, are made from stainless steel at all times:

  1) Damper casing and all components permanently attached
  2) Blade holders including pins, metal parts of blades
  3) Control components inside the damper (L-profile, pin with lever, rod, fasteners)
  4) Parts of a manual contol entering the inner space of a damper casing (lower sheet of a manual control, lock holder “1”, lock lever “2”, closing spring, 8 dia. stopper pin, manual control pin)
  5) Inspection opening cover including the stirrup and fasteners (if they are parts of the cover)
  6) Bearing for torque transfer from the lever with pin on the blade L-profile (made from AISI 440C)

  The damper blade is made from boards of homogeneous material Promatect-H, connected with galvanized "U" clips on the outside, sealed with Promat K84 glue.

  Fusible link is identical for all material variants of the dampers. Upon specification by customer, the fusible link can be made from A4 from stainless steel sheet metal.

  Thermoelectric activation device BAT is modified for stainless-steel variant of the dampers; standard galvanised screws are replaced with stainless-steel M4 screws of corresponding class. Damper casing has stainless-steel riveting M4 nuts.

  Plastic, rubber and silicon components, sealants, foaming tapes, glass-ceramic seals, housings, brass bearings of the blade, actuators, and end switches are identical for all material variants of the dampers.

  Some fasteners and components are only available in one class of stainless steel; the type will be used in all stainless-steel variants.

  The damper blade in the variant for chemical environments (Class A4) is always treated with a coating of chemically resistant Promat SR.

  Any other requirements for the design will be considered atypical and will be addressed on an individual basis.

VIII. TRANSPORTATION, STORAGE AND WARRANTY

Logistic terms

- Dampers are delivered on pallets. As standard, the dampers are wrapped in plastic foil for protection during transport and must not be used for long-term storage. Temperature changes during transport can cause condensation of water inside the packaging and thereby cause corrosion of materials used in the dampers (e.g. white corrosion on zinc-coated items or mould on calcium silicate). Therefore, it is necessary to remove the transport packaging immediately after unloading to allow air to circulate around the product.
- The dampers must be stored in clean, dry, well ventilated and dust-free environment out of direct sunlight. Ensure protection against moisture and extreme temperatures (minumum temperature +5°C). The dampers must be protected against mechanical and accidental damage prior to installation.
- Another required packaging system should be approved and agreed by manufacturer. Packaging material is not returnable in case that another packaging system (material) is required and used and it is not included into final price of damper.
- Dampers are transported by box freight vehicles without direct weather impact, there must not occur any shocks and ambient temperature must not exceed +50°C. Dampers must be protected against impact when transported and manipulated. During transportation, the damper blade must be in the "CLOSED" position.
- Dampers must be stored indoor in environment without any aggressive vapours, gases or dust. Indoor temperature must be in the range from -30°C to +50°C and maximum relative humidity 95%.

Warranty

- The manufacturer provides a warranty of 24 months from the date of dispatch for the dampers.
- In case of using a Schischek actuator, the manufacturer provides a 12-month warranty for the actuator from the date of shipment.
- The warranty for fire dampers FDMQ 120, provided by the manufacturer, is completely void if actuating, closing and control devices are unprofessionally handled by untrained workers or if electric components, i.e. limit switches, actuators, communication and supply devices and thermoelectric activation devices are dismounted.
- The warranty is void if dampers are used for other purposes, devices and working conditions than those allowed by these technical conditions or if the dampers are mechanically damaged during handling.
- If the dampers are damaged by transport, a record must be written down with the forwarder at reception for later complaint.

IX. ASSEMBLY, ATTENDANCE AND MAINTENANCE

- Assembly, maintenance and damper function check can be done only by qualified and trained person, i.e. “AUTHORIZED PERSON” according to the manufacturer documentation. All works done on the fire dampers must be done according international and local norms and laws.
- All effective safety standards and directives must be observed during damper assembly.
- To ensure reliable damper function it is necessary to avoid blocking the actuating mechanism and contact surfaces with collected dust, fibre and sticky materials and solvents.
- Flange and screw joints must be conductively connected to protect against dangerous contact. 2 galvanized lock washers that are placed under the head of one screw and a fastened nut are used for conductive connection.

Manual operation - actuator control without electric voltage

- A special wrench (part of the actuator) can be used to manually turn the damper blade to any position. When the wrench is turned in the direction of the arrow, the damper blade rotates to its open position. As the blade rotation is stopped, in every position, the actuator will be locked. Unlocking is possible even manually as per instructions on the actuator, or by the activation of the supply voltage.
- If the actuator is manually locked, the damper blade will not close in the event of a fire after the activation of the thermoelectric activation device BAT. To restore correct damper operation, the actuator must be unlocked (manually or by applying power supply).

Limit switches

- If the damper is equipped with limit switches and these switches are not used during operation (e.g. because of a project change), they can be left on the damper and not connected (they need not be dismounted).
- On the other hand, if the limit switch is to be added to the damper design, the change can be implemented by change kit.
- These facts must be recorded in the respective operation documentation of the damper (record books of the damper, fire logs, etc.) and subsequently, adequate function checks must be carried out.

Installation / fixing the damper

- The damper casing shall not be deformed in the course of bricking in.
- Once the damper is built in, the damper blade shall not grind on the damper casing during opening or closing.

Protection of the damper casing against buckling during installation, especially for large sizes!

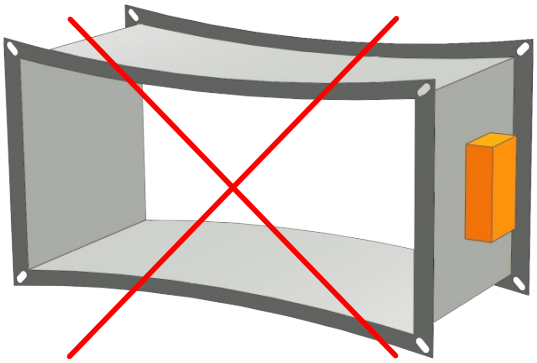

WRONG!

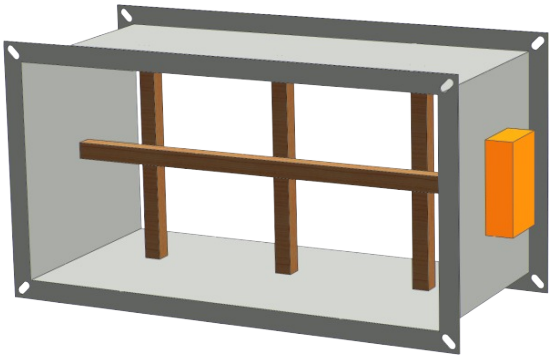

Reinforcement of the casing with wooden beams

Change of manual control for the actuator or vice versa

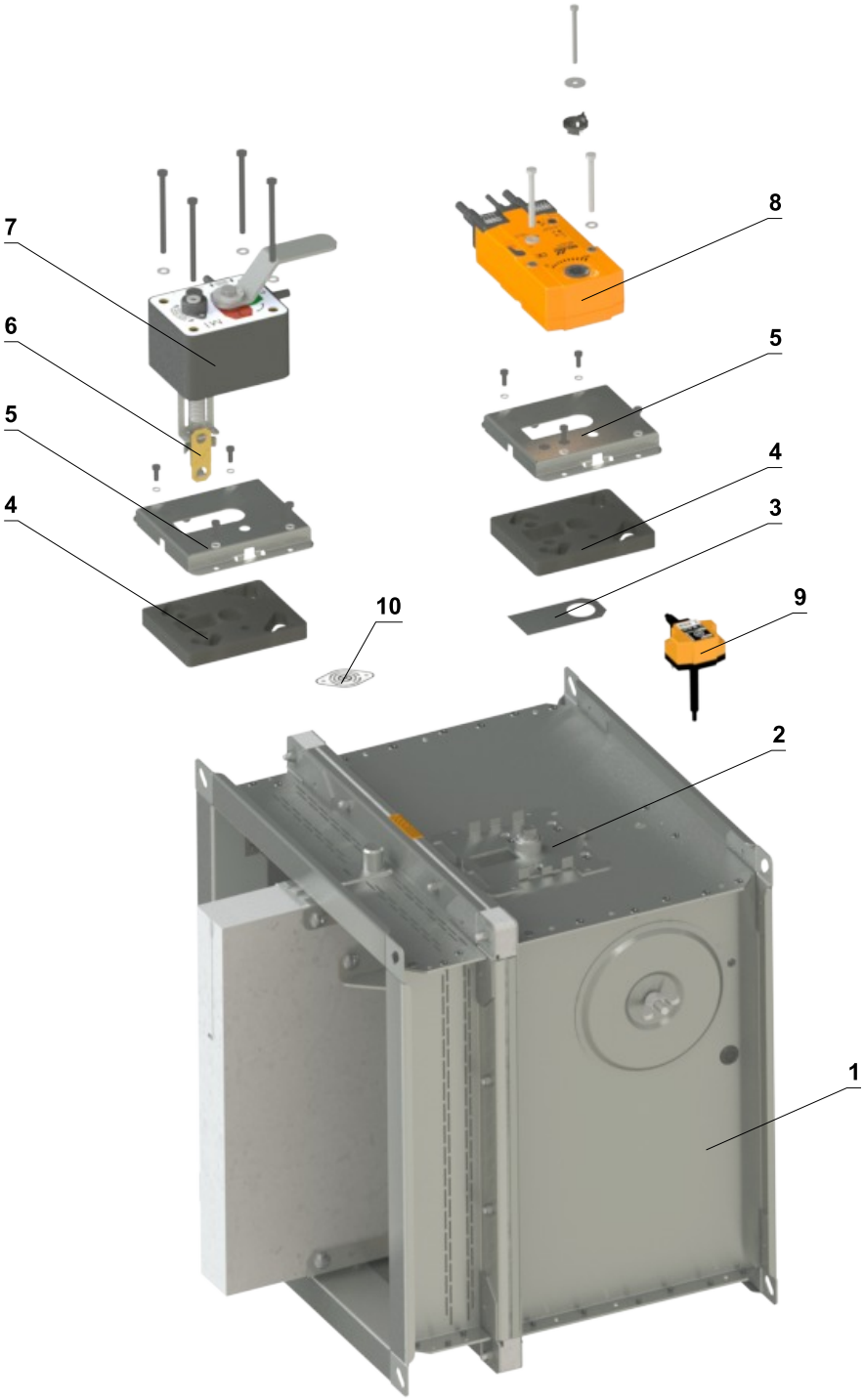

1	Damper	6	Fusible link
2	Mouting plate	7	Manual control
3	Sealing cover	8	Spring return actuator
4	Sealing of a mouting plate	9	Thermoelectric activation device BAT
5	Cover of a mouting plate	10	Sensor sticker

Reinforcing frame VRM-Q 120

- For damper installation outside wall construction is necessary to use reinforcing frame VRM-Q 120
- Install reinforcing frame only after connecting duct.
- Fastening material is included in the package except glue K84

Fixing reinforcing frame VRM-Q 120 to the damper casing

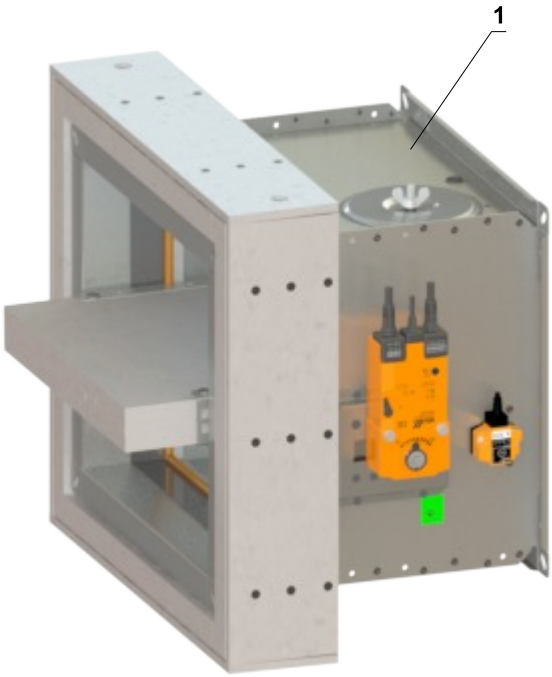

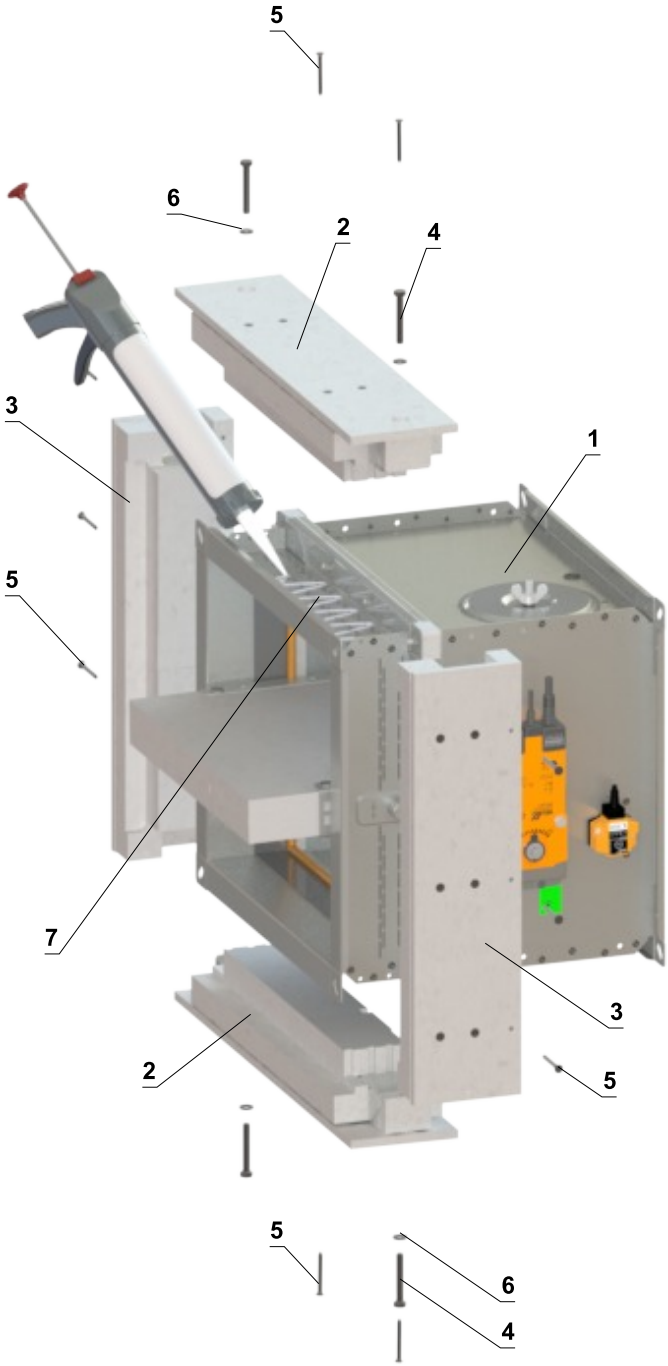

Installation procedure

1) Apply K84 glue over the entire surface
2) Attach the frame parts to the damper and screw it in the corners using M8x60 mm hexagon head screws DIN 931 with M8/8.4 washers DIN 7349
3) Screw 5x60 mm screws into the predrilled holes

1 FDMQ 120
2 Part A of VRM-Q 120
3 Part B of VRM-Q 120
4 Hexagon head screw M8x60 mm DIN 931
5 Screw 5x60 mm
6 Washer M8/8,4 DIN 7349
7 Glue K-84 PROMAT

Protective cladding boards

- Protective cladding boards must be used as part of the penetration filling of installation with Ablative Coated Batt.
- Can be ordered from MANDIK (installed on the damper or as an accessory) or can be sourced from local supplier
- If protective cladding boards are required, this must be specified in the ordering key
- Protective cladding boards are made of PROMATECT-MST, thickness 30 mm.
- Glue K84 is not included in the package

Installation procedure

1) Apply K84 glue over the entire surface
2) Attach protective cladding boards to the damper and glue them to the casing
3) Screw parts A and B together using 4x screw 5x70 mm
4) Completely fill the gaps with glue

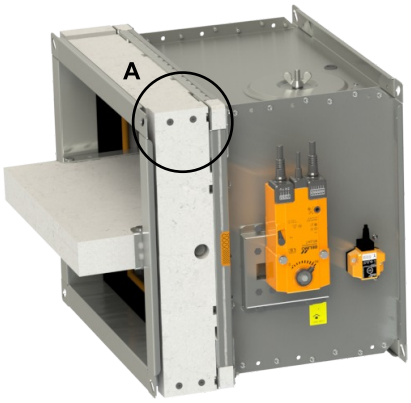

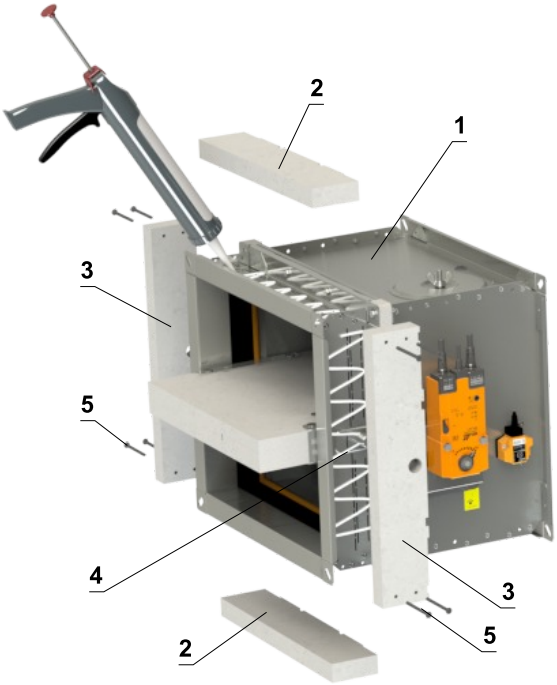

DETAIL A

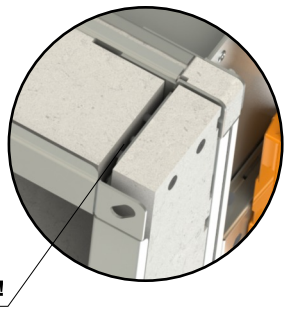

Completely fill the gaps between boards!

1 FDMQ 120
2 Part A of protective cladding boards
3 Part B of protective cladding boards
4 Glue PROMAT K-84
5 Screw 5x70 mm

Part A

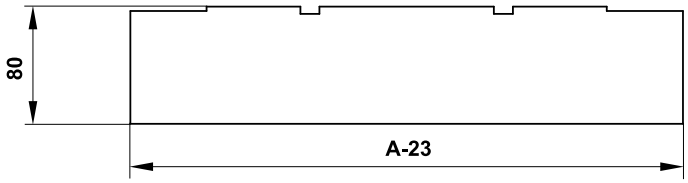

- Detailed dimensions of protective cladding boards on request

Part B

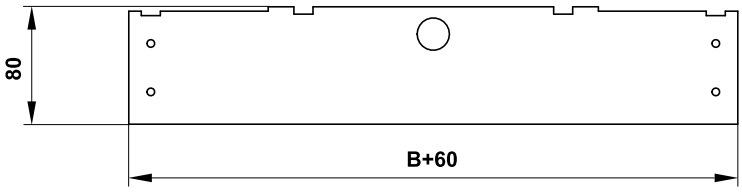

Entry into service and revisions

- Before putting the damper into operation, serviceability checks and functional tests must be carried out including testing of functionality of all electrical elements. After putting into operation these serviceability checks must be carried at least twice a year. If no defect is found during two subsequent serviceability checks, these checks can be carried out once a year.
- In case that dampers are found unable to serve for their function for any cause, it must be clearly marked. The operator is obliged to ensure that the damper is put into condition in which it is ready for function and meanwhile he is obliged to provide the fire protection by another appropriate way.
- Results of regular checks, imperfections found and all-important facts connected with the damper function must be recorded in the "FIRE BOOK" and immediately reported to the operator.
- Before entering the dampers with actuator into operation after their assembly and by sequential checks. Check of blade rotation into the breakdown position "CLOSED" can be done after disconnecting the actuator supply (e.g. by pressing the test button at the thermoelectric activation device BAT or disconnecting the supply from ELECTRICAL FIRE SIGNALISATION). Check of blade rotation back into the "OPEN" position can be done after restoration of power supply (e.g. by releasing the test button or restoration of supply from ELECTRICAL FIRE SIGNALISATION). Without power supply, the damper can be operated manually and fixed in any required position. Release of the locking mechanism can be achieved manually or automatically by applying the supply voltage. It is recommended to provide periodical checks, maintenance and service actions on fire equipment by authorized persons. The authorized persons can be trained by producer, or by authorized distributor. All effective safety standards and directives must be observed during fire damper assembly.
- Visual inspection of proper damper installation, inner area of a damper, damper blade, contact surfaces and silicon seal.
- For regular or exceptional inspection of interior of fire damper, micro-camera device can be used. On each fire damper is an inspection opening. In the case of inspection by camera, take out the black rubber cap, insert the camera inside the damper, check interior and at the end of inspection, put the rubber cap back tightly to cover the empty hole.

For dampers with manual control, following checks must be carried out

Check of a manual control and fusible link

- **To check the function of the manual control proceed as follows:**
- Turn the damper blade to "CLOSED" position as follows:
  - The damper blade is in "OPEN" position.
  - Press the control button of the manual control to turn the damper blade to "CLOSED" position.
  - Check the damper blade rotation to "CLOSED" position.
  - Damper blade closing shall be smooth and fast, the control lever shall be in „CLOSED“ position.
- Turn the damper blade to "OPEN" position as follows:
  - Turn the control lever by 90°.
  - Check the damper blade rotation to "OPEN" position.
  - The lever will automatically lock in "OPEN" position.
- **Check of function and condition of the fusible link:**
  - To check the function and the status of the fuse it's possible to remove the manual control from the casing of the fire damper which is attached to the damper casing with four screws M6.
  - Removing the fusible link from the fuse holder of a manual control, checks its correct functionality.
  - The manual control is identified as M2 to M5, depending on the closing spring strength.

For dampers with actuator, following checks must be carried out

- Check the rotation of the blade to "CLOSED" failure position after disconnection the power supply of the actuator (e.g. by pressing the test button on the thermoelectric activation device BAT or by disconnection the power supply from electrical fire signalization). Check the rotation of the blade back to "OPEN" position by restoring the power supply to the actuator (e.g. by releasing the test button or by restoring the power supply from electrical fire signalization).

The check of function of the damper with actuator can be carried out as follows

- By disconnecting and restoring the power supply, e.g. by a signal from electrical fire signalization.
- By pressing the test button on the thermoelectric activation device BAT (simulating fuse tripping).

Before putting the dampers into operation and during subsequent function checks, the following checks must be carried out for dampers with optical smoke detector

- The function checks of the optical smoke detector are to be carried out by employees of an authorized organization who have corresponding electrotechnical qualification and have been properly trained by the manufacturer. The function checks are to be carried out as a part of function checks of the fire dampers, at least 1x a year.
- For the function checks, the damper blade should be in "CLOSED" position with the fan off or with closed air regulation situated between the fan and the fire damper.

- Inspection opening disassembly
  - Release the covering lid by turning the wing nut and while turning the lid right or left release it from the security belt. Then tilt the lid and remove it from its original position.

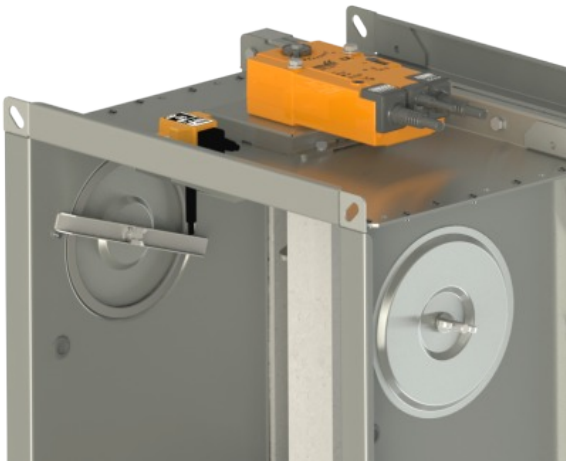

Inspection opening detail

- Ensure each damper is fully checked for operational capability, control should be initiated from the control system or by manual control. Damper blades should open and close correctly and operation should be visually inspected and documented prior to handover.

How to proceed after Tf1 or Tf2 fuses have been activated

- If the fusible link **Tf1** is interrupted (due to temperature outside the duct), it is necessary to replace the spring return actuator. → see page 10
- If the fusible link **Tf2** is interrupted (due to temperature inside the duct) , only the spare part ZBAT 72 (95/120/140) needs to be replaced (acc.to the activation temperature). → see page 10

X. ORDERING INFORMATIONS

Ordering key

1	2	3		4	5	6	7	8		9	10	11
FDMQ 120	EN	500x250	/	375	.40	120	A	Q30	-	ZN	IW	G

EXAMPLES:

FDMQ 120 EN 500x250/375 .40 Q30-ZN

Fire damper FDMQ 120, dimension 500x250 mm, built length 375 mm, control design with spring return actuator AC 230 V, standard activation temperature 72 °C, flange dimension 30 mm, galvanized material variant, without installation kit/frame, standard silicon seal.

FDMQ 120 EN 500x250/375 .40 120 A Q30-ZN IW G

Fire damper FDMQ 120, dimension 500x250 mm, built length 375 mm, control design with spring return actuator AC 230 V, activation temperature 120 °C, with protective cladding boards, flange dimension 30 mm, galvanized material variant, impregnation against humidity, rubber cold seal.

1| Fire damper type - FDMQ 120

2| Country of destination

3| Damper dimensions A x B → see pages 16 to 21

"A" is the width of the damper
"B" is the height of the damper

4| Built length - 375 mm

5| Damper design

.01	Manual control and thermal
.02	Manual control and thermal (Zone 1,2)
.11	Manual control and thermal with a terminal switch („CLOSED“)
.12	Manual control and thermal with a terminal switch („CLOSED“) (Zone 1,2)
.80	Manual control and thermal with two terminal switches („OPEN“, „CLOSED“)
.81	Manual control and thermal with two terminal switches („OPEN“, „CLOSED“) (Zone 1,2)
.40	With actuator BF 230-TN (BFL, BFN 230-T) - voltage AC 230 V
.41 *	With actuator BF 24-TN (BFL, BFN 24-T), with smoke detector ORS 142 K and with supply device BKN 230-24-MOD (voltage AC 230 V)
.42 **	With actuator ExMax-15-BF, with thermoelectric activation device ExPro-TT (Zone 1,2) - supply voltage range 24 to 230 VAC/DC
.50	With actuator BF 24-TN (BFL, BFN 24-T) - voltage AC/DC 24 V
.51 *	With actuator BF 24-TN (BFL, BFN 24-T), with smoke detector ORS 142 K (voltage AC/DC 24 V)
.63	With communication and supply device BKN 230-24-MOD, with actuator BF 24-TN-ST (BFL, BFN 24-T-ST)
.63S *	With communication and supply device BKN 230-24-MOD, with actuator BF 24-TN-ST (BFL, BFN 24-T-ST) and with smoke detector ORS 142 K

* *For sizes A<160 mm or B<160 mm, the optical smoke detector ORS 142 K is not part of the fire damper and is supplied separately.*

** *These designs are supplied only with an activation temperature of 72 °C.*

■ *Detailed information for ATEX dampers (ZONE 1,2) → see Appendix*

6| Activation temperature

Manual control		Spring return actuator control	
	72 °C *		72 °C *
104	104 °C	95	95 °C
147	147 °C	120	120 °C
		140	140 °C

* *Standard activation temperature*

7| Installation kit/frame

	Without installation kit/frame
A	With protective cladding boards (for Ablative Coated Batt installation)
VRM-Q 120	Reinforcing frame VRM-Q 120

8| Flange dimension

Q30	Flange width 30 mm
Q20	Flange width 20 mm

9| Material and other design options

ZN	Galvanized
A2	Stainless steel 1.4301 (AISI 304)
A4	Stainless steel 1.4404 (AISI 316L) - included damper blade impregnation against chemical - type PROMAT SR

10| Surface treatment

	Without surface treatment
IW	Damper blade impregnation, impregnating agent PROMAT 2000 - impregnation against humidity
IA	Damper blade impregnation, impregnating agent PROMAT SR - impregnation against chemical

11| Cold seal variant

	Silicone rubber *
G	Silicone-free rubber

** Standard cold seal*

Accessories

Protective cladding boards

1	2	3
CLADDING BOARDS	FDMQ 120	500x250

1| Accessory type - cladding boards

2| Fire damper type - FDMQ 120

3| Damper dimensions A x B → see pages 16 to 21

Reinforcing frame VRM-Q 120

1	2	3
VRM-Q 120	FDMQ 120	500x250

1| Accessory type - reinforcing frame VRM-Q 120

2| Fire damper type - FDMQ 120

3| Damper dimensions A x B → see pages 16 to 21

Data label

- Data label is placed on the damper casing (example)

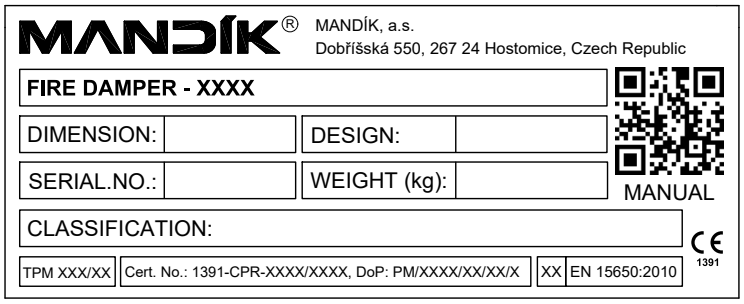

The producer reserves the right for innovations of the product.
For actual product information see www.mandik.com

MANDÍK®

www.mandik.com

MANDÍK, a. s. • Dobříšská 550 • 267 24 Hostomice • Czech Republic • Tel.: +420 311 706 742 • E-Mail: mandik@mandik.cz