MANDÍK

TPM 156/22
Version 2026-11-09

SEDM

Multi compartment smoke control damper

Technical Documentation
Installation, Commissioning, Operation, Maintenance and Service Manual

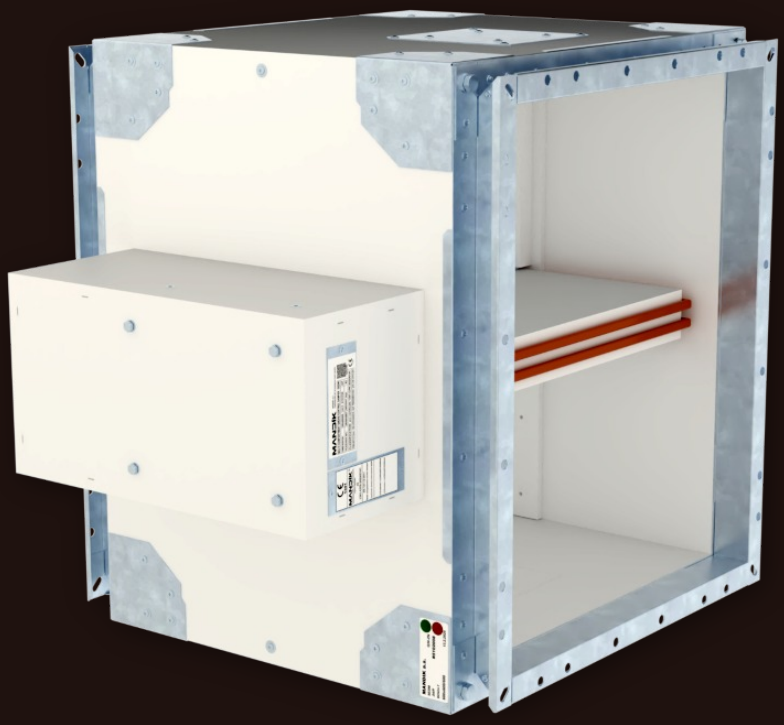

UK CA 2822

CE 1391

CCPI
ASSESSED PRODUCT INFORMATION
015800192/1227
Smoke Control Dampers

MANDÍK®
www.mandik.co.uk

Manufacturer
MANDÍK, a.s. • Dobříšská 550 • 267 24 Hostomice • Czech Republic • Tel.: +420 311 706 742 • E-Mail: mandik@mandik.cz

Authorized representative
Mandik UK Limited • 210 Park Avenue • Aztec West • Bristol BS32 4SY • United Kingdom • Tel.: +44 117 4526376 • E-Mail: help@mandik.co.uk

These technical specifications state a row of manufactured sizes and models of Multi compartment smoke control damper SEDM. It is valid for production, designing, ordering, delivery, maintenance and operation.

CONTENT

I. GENERAL....3
Description....3
II. DESIGN....4
Design with actuating mechanism....4
GEN1 - MDCM and MDPM....9
Communication and control module MDPM....9
III. DIMENSIONS....10
Technical parameters....12
IV. INSTALLATION....24
Placement and installation....24
Statement of installations....25
Installation in solid wall construction of fire compartment....26
Installation in gypsum wall construction of fire compartment....27
Installation in solid ceiling construction of fire compartment....28
Installation in battery....29
Installation into/onto vertical or horizontal smoke extraction duct....33
V. SUSPENSION SYSTEMS....35
Example of duct connection....42
VI. ACCESSORIES....45
VII. TECHNICAL DATA....46
Pressure loss....46
Noise data - level of acoustic output corrected with filter A....48
VIII. MATERIAL, FINISHING....54
IX. TRANSPORTATION AND STORAGE....54
Logistic terms....54
X. ASSEMBLY, ATTENDANCE AND MAINTENANCE....55
Electrical connection of the actuator in protection box....55
Connection of the control module MDPM & MDCM interfaces inside protection box....56
Entry into service and revisions....57
XI. ORDERING INFORMATION....58
Ordering key....58
Accessories....59
Data label....59

I. GENERAL

Description

Dampers SEDM are designed into an inlet or extract smoke ventilation system. The dampers are designed either to close to provide compartmentation or to open (for fresh air inlet) or to allow removal of the heat and combustible products from a fire in the affected fire zone/compartment.

The damper blade is controlled by electrical actuating mechanism.

Dampers are fire resistant and are intended for systems with manual or automatic activation.

Dampers are designed for using in fire compartments that can be connected to the smoke exhaust ducts (tested according to BS EN 1366-8) or they can be installed in or on the construction of the fire compartment.

Dampers can be delivered with or without flange(s), with cover grille(s).

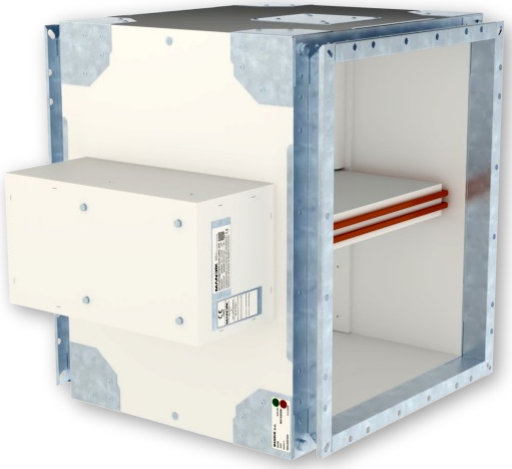

Damper SEDM

Damper characteristics

- CE certified acc. to BS EN 12101-8
- Tested in accordance with BS EN 1366-10
- Classified acc. to BS EN 13501-4
- External Casing leakage class ATC 3 (old marking “C“), Internal leakage min. class 2 acc. to BS EN 1751
- Cycling test in class C_{mod} acc. to BS EN 12101-8
- Certificate of constancy of performance UKCA No. 2822-UKCA-CPR-XXXX
- Certificate of constancy of performance CE No. 1391-CPR-XXXX/XXXX
- Declaration of Perfomance UKCA No. PM/SEDM/02/XX/X
- Declaration of Perfomance CE No. PM/SEDM/01/XX/X
- Hygienic assessment - Report No. 1.6/pos/19/19b

Classification of Dampers		
Supporting construction	**Installation type**	**Classification**
Horizontal or vertical smoke extraction ducts	Connection to single or multi compartment smoke extraction ducts tested according to BS EN 1366-8 or 9	EI 120 (h_{od}-v_{ed} i↔o) S1000C_{mod}HOT 400/30MAmulti*
In solid/ gypsum plasterboard wall construction, min. thickness 100 mm	Ablative Coated Batt	EI 120 (v_{ew} i↔o) S1500C_{mod}HOT 400/30MAmulti*
In solid ceiling construction, min. thickness 150 mm		EI 120 (h_{ow} i↔o) S1500C_{mod}HOT 400/30AAmulti*

* In practice dampers are not in the open position at the beginning of smoke threat.

Working conditions

- Exact damper function is provided under the following conditions
  - maximum air velocity 15 m/s
  - underpressure max. -1500 Pa or overpressure max. 500 Pa
- Dampers are designed for installation in vertical or horizontal openings of fire separating constructions.
- The damper may be in any position between the position open and closed (those positions included) at the beginning of the risk of fire. Command to close the damper shall be started within 30 seconds from the beginning of the risk of fire, command to open the damper shall be started within 25 minutes for Manual activation (MA) from the beginning of the risk of fire, or within 30 seconds for Automatic activation (AA) respectively.
- Dampers are designed for macroclimatic areas with mild climate according to BS EN IEC 60 721-3-3 ed.2., class 3K22. (Environment 3K22 is typically protected place with regulated temperature).
- Temperature in the place of installation is permitted to range from -30°C to +50°C.

II. DESIGN

Design with actuating mechanism

Design .44 and .54

- Belimo actuators are used for dampers, series BEN, BEE, BE for 230V AC resp. 24 V AC/DC, Schischek InMax 50.75-S actuators (universal 24V or 230V supply) are used for large size of dampers.
- After connection to the power supply voltage, the actuator moves the damper blade to the "OPEN" position or "CLOSED" (according to the corresponding connection, see wiring diagram). If the power supply is interrupted, the actuator stops at the current position. The signalling of the "OPEN" and "CLOSED" damper blade positions is ensured by two built-in fixed “potential-free” end- limit switches.
- The actuator for operating the damper blade is mounted in an insulated cover/box. It is accessible after removing the cover lid. The electrical connection of the actuator is made with a non-flammable cable (or a cable located in the adjoining cable duct), which passes through an opening made in the wall of the insulated cover/box when installing the damper or when connecting the actuator power cable. The power and control cable must be Cat 3 as BS 8519.

Design .65

- Belimo modulating actuators, BEN (BEE)-SR series for 24V AC/DC are specially designed for remote control of smoke control dampers. The position of the damper blade is adjustable by means of control voltage 0 (2)...10V DC.
- The signalling of the "OPEN" and "CLOSED" damper blade positions is ensured by two built-in fixed “potential-free” limit switches.
- The actuator for operating the damper blade is mounted in an insulated cover/box. It is accessible after removing the cover lid. The electrical connection of the actuator is made with non-flammable cables (or cables located in the adjoining cable duct), which pass through an opening made in the wall of the insulated cover when installing the damper or when connecting the power cables of the actuator. The power and control cable must be Cat 3 as BS 8519.

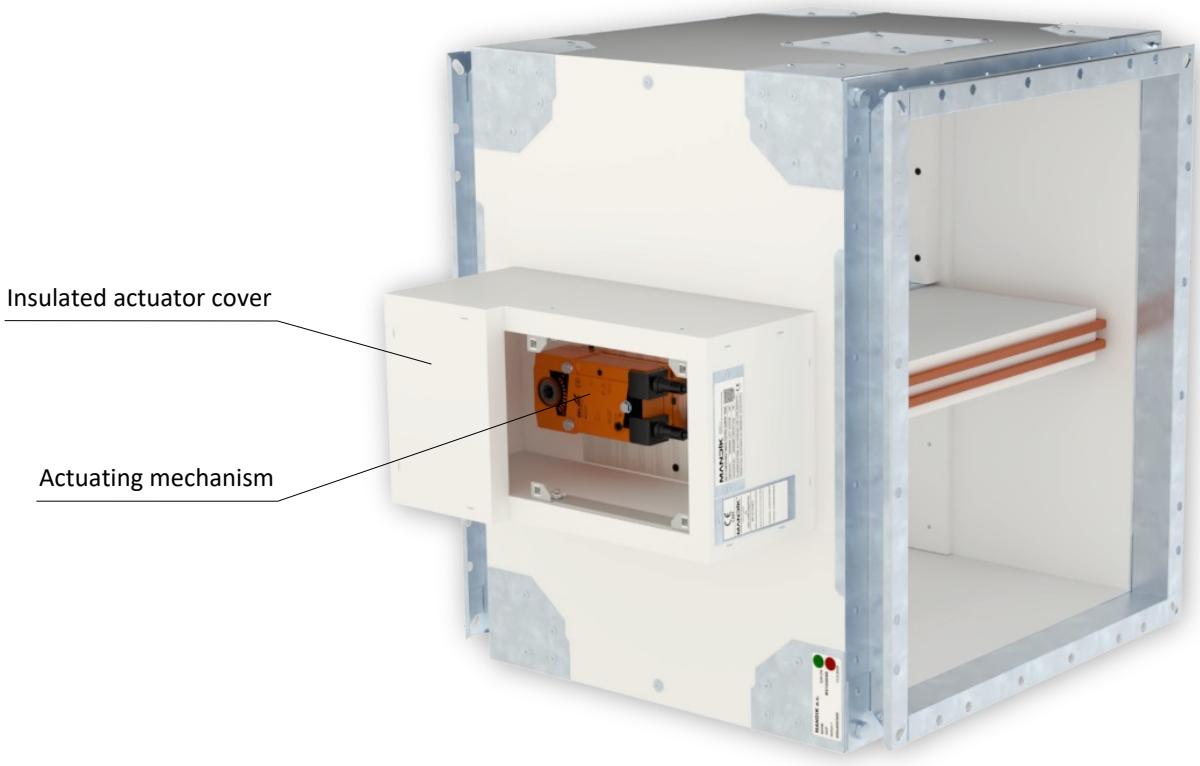

Design .44, .54 and .65

Actuator BELIMO BEN 24(-ST)

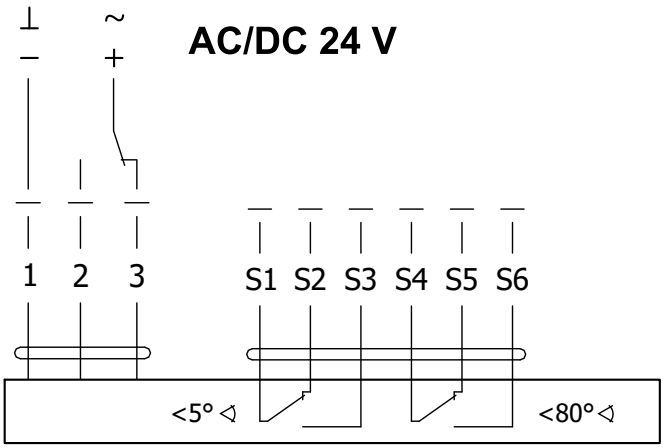

Actuator BELIMO BEN 24-SR

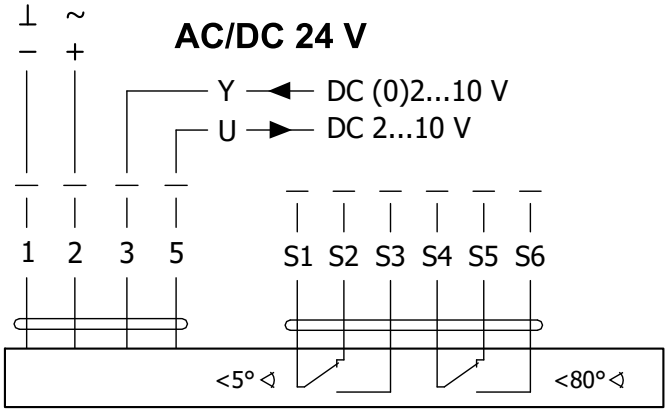

Actuator BELIMO BEN 230

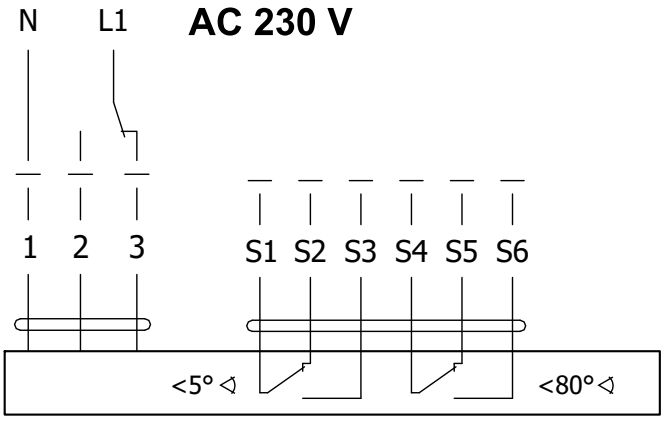



Extended leads are not possible with smoke control dampers as the belimo cables are not fire rated to CAT3 to BS 8519. Field wiring must be brought into and terminated within the damper housing. For more detail → see pages 55 to 57, paragraph Assembly.

Actuator BELIMO BEN 24(-ST), BEN 24-SR, BEN 230			
Actuator BELIMO - 15 Nm	**BEN 24(-ST)**	**BEN 24-SR***	**BEN 230**
Power voltage	AC/DC 24 V 50/60Hz	AC/DC 24 V 50/60Hz	AC 230 V 50/60Hz
Power consumption - in operation - in the end position	3 W 0,1 W	3 W 0,3 W	4 W 0,4 W
Dimensioning	6 VA (Imax 8,2 A @ 5 ms)	6,5 VA (Imax 8.2 A @ 5 ms)	7 VA (Imax 4 A @ 5 ms)
Protection class	III	III	II
Degree of protection		IP 54	
Adjustment time for 95°		< 30 s	
Ambient temperature Storage temperature		-30°C ... +55°C -40°C ... +80°C	
Connection - drive - auxiliary switch	Cable 1 m, 3 x 0,75 mm² Cable 1 m, 6 x 0,75 mm² (BEN 24-ST) with plug connectors	Cable 1 m, 4 x 0,75 mm² Cable 1 m, 6 x 0,75 mm²	Cable 1 m, 3 x 0,75 mm² Cable 1 m, 6 x 0,75 mm²

* Only available for 24V and selected damper sizes

Actuator BELIMO BEE 24(-ST)

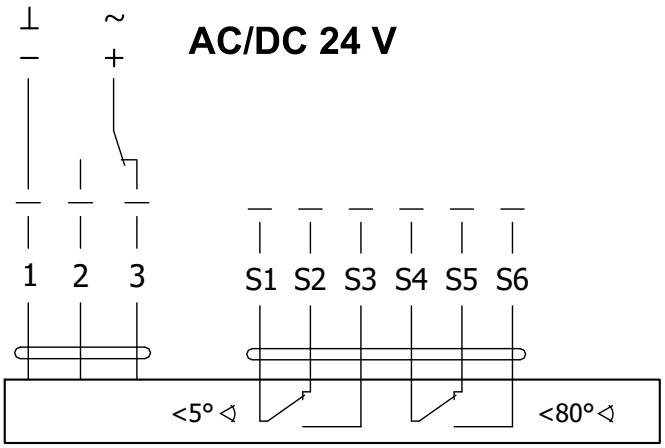

Actuator BELIMO BEE 24-SR

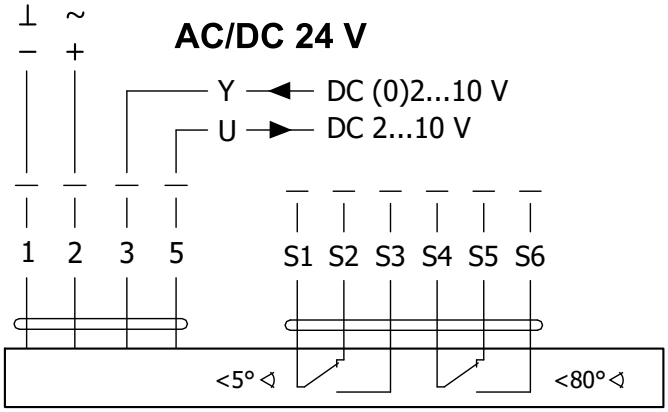

Actuator BELIMO BEE 230

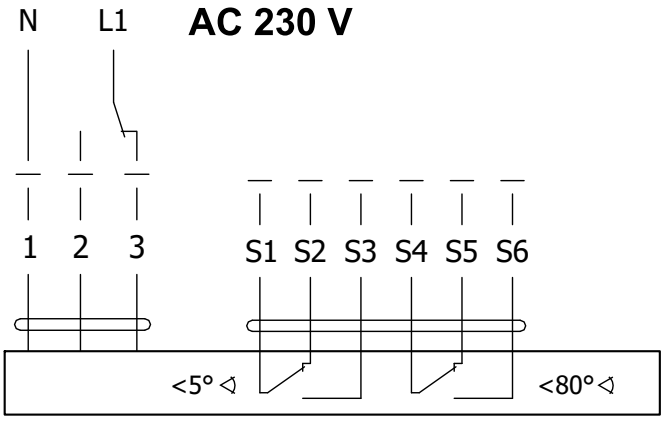



Extended leads are not possible with smoke control dampers as the belimo ccables are not fire rated to CAT3 to BS 8519. Field wiring must be brought into and terminated within the damper housing. For more detail → see pages 55 to 57, paragraph Assembly.

Actuator BELIMO BEE 24(-ST), BEE 24-SR, BEE 230			
Actuator BELIMO - 25 Nm	**BEE 24(-ST)**	**BEE 24-SR***	**BEE 230**
Power voltage	AC/DC 24 V 50/60Hz	AC/DC 24 V 50/60Hz	AC 230 V 50/60Hz
Power consumption - in operation - in the end position	2,5 W 0,1 W	3 W 0,3 W	3,5 W 0,4 W
Dimensioning	5 VA (Imax 8,2 A @ 5 ms)	5,5 VA (Imax 8.2 A @ 5 ms)	6 VA (Imax 4 A @ 5 ms)
Protection class	III	III	II
Degree of protection		IP 54	
Adjustment time for 95°		< 60 s	
Ambient temperature Storage temperature		-30°C ... +55°C -40°C ... +80°C	
Connection - drive - auxiliary switch	Cable 1 m, 3 x 0,75 mm² Cable 1 m, 6 x 0,75 mm² (BEE 24-ST) with plug connectors	Cable 1 m, 4 x 0,75 mm² Cable 1 m, 6 x 0,75 mm²	Cable 1 m, 3 x 0,75 mm² Cable 1 m, 6 x 0,75 mm²

* Only available for 24V and selected damper sizes

Actuator BELIMO BE 24-12(-ST)

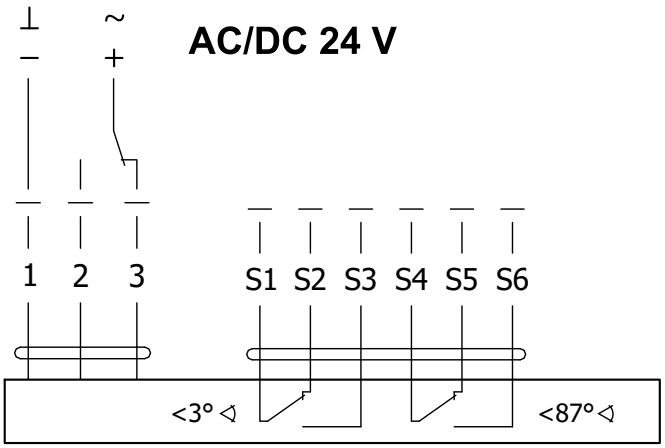

Actuator BELIMO BE 230-12

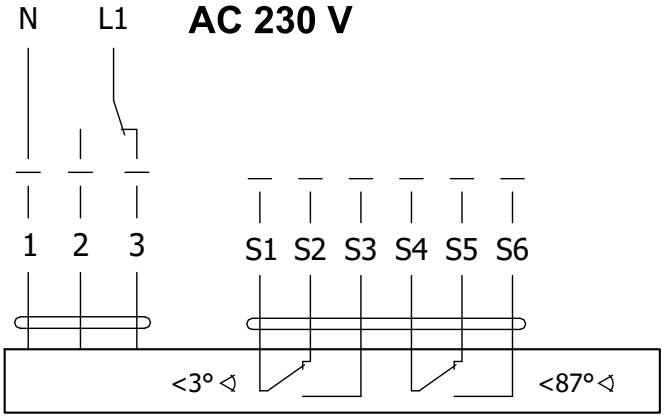



Extended leads are not possible with smoke control dampers as the belimo cables are not fire rated to CAT3 to BS 8519. Field wiring must be brought into and terminated within the damper housing. For more detail → see pages 55 to 57, paragraph Assembly.

Actuator BELIMO BE 24-12(-ST), BE 230-12		
Actuator BELIMO - 40 Nm	**BE 24-12(-ST)**	**BE 230-12**
Power voltage	AC/DC 24 V 50/60Hz	AC 230 V 50/60Hz
Power consumption - in operation - in the end position	12 W 0,5 W	8 W 0,5 W
Dimensioning	18 VA (Imax 8,2 A @ 5 ms)	15 VA (Imax 7.9 A @ 5 ms)
Protection class	III	II
Degree of protection	IP 54	
Adjustment time for 95°	< 60 s	
Ambient temperature Storage temperature	-30°C … +55°C -40°C … +80°C	
Connection - drive - auxiliary switch	Cable 1 m, 3 x 0,75 mm^2 Cable 1 m, 6 x 0,75 mm^2 (BE 24-ST) with plug connectors	

Actuator SCHISCHEK InMax 50.75-S

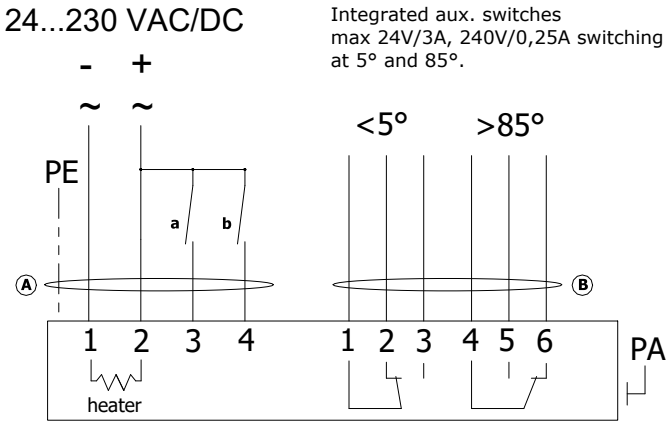

Integrated aux. switches
max 24V/3A, 240V/0,25A switching
at 5° and 85°.



Extended leads are not possible with smoke control dampers as the Schischek cables are not fire rated to CAT3 to BS 8519. Field wiring must be brought into and terminated within the damper housing. For more detail → see pages 55 to 57, paragraph Assembly.

Actuator SCHISCHEK InMax 50.75-S	
Actuator SCHISCHEK	**InMax 50.75-S**
Power voltage	24-240 VAC/DC 50/60Hz
Power consumption - motoring - heating	10 W 16 W (start at -20°C)
Protection class	I
Degree of protection	IP 66
Adjustment time for 95°	< 60 s
Ambient temperature Storage temperature	-40°C … +50°C -40°C … +70°C
Connection	Cable 1 m, 0,5 mm^2

GEN1 - MDCM and MDPM

- The MDCM damper control module is connected on a bi-directional communication loop back to a control panel, typically located at the FCC.
- Each MDCM has a 230v local spur to power the damper actuator.
- Max terminal size in MDCM and MDPM 2.5mm²
- Up to 96x MDCM's can be connected on one loop and multiple loops can be incorporated.
- With an MA or AA system the MDCM's are mounted in a fire rated and tested Ca-Si housing to BS EN1366-10.



Details of connection of the control module interfaces inside protection box → see page 56

160mm x 160mm x 62mm deep steel enclosure powder coated red - IP54

Communication and control module MDPM

- The MDPM damper control module is a combined control module and damper positioning module to provide a balanced/3RD position.
- It is connected on a bi-directional communication loop back to a control panel.
- Max terminal size in MDCM and MDPM 2.5mm²
- Each MDPM has a 230v local spur for powering the damper actuator, located at the FCC.
- Up to 96x MDPM's can be connected on one loop and multiple loops can be incorporated.
- With an MA or AA system the MDPM's are mounted in a fire rated and tested Ca-Si housing to BS EN1366-10.



Details of connection of the control module interfaces inside protection box → see page 56

230mm x 160mm x 62mm deep steel enclosure powder coated red - IP54

III. DIMENSIONS

SEDM without flange

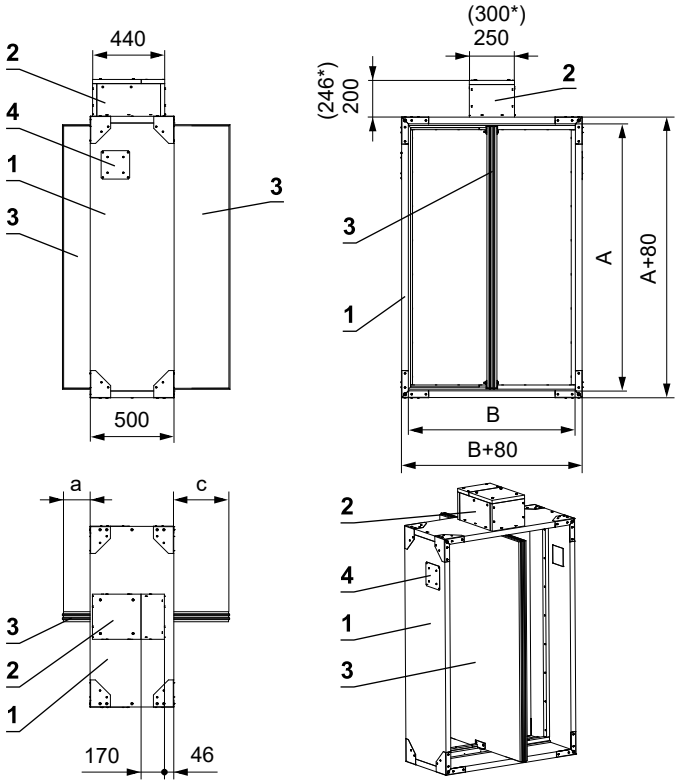

SEDM with flange

- External dimensions of flance A(B) + 60 is not same as external dimensions of damper

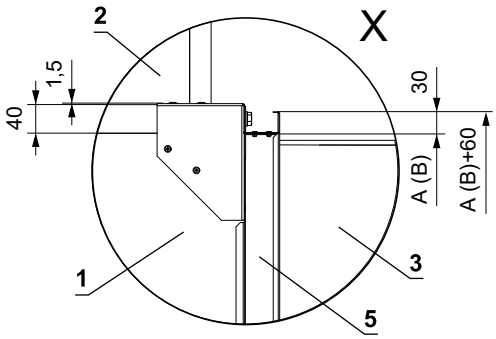

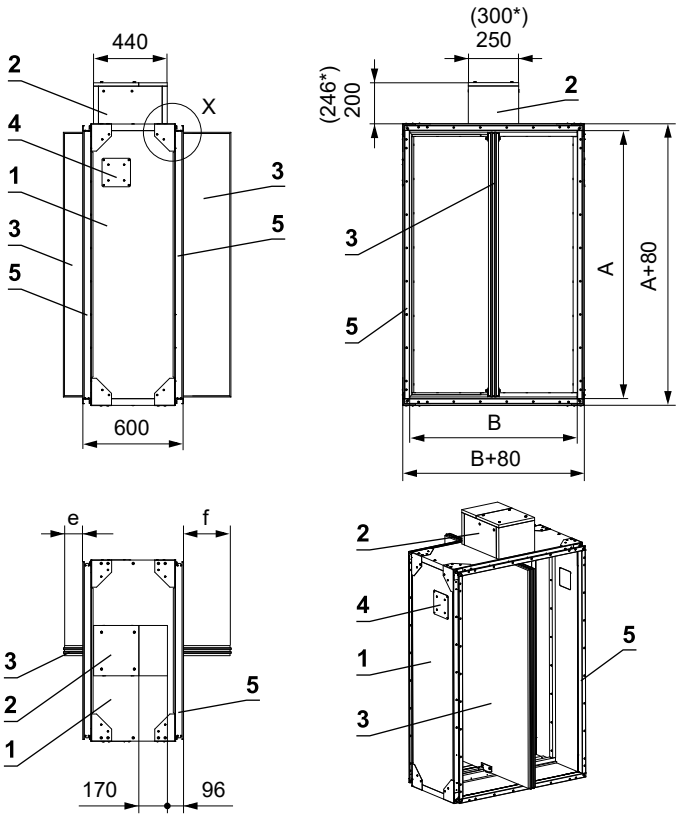

1 SEDM
2 Actuating mechanism
3 Damper blade
4 Inspection opening cover
5 Flange**

* Dimensions with actuating mechanism InMax 50.75S.
** If it is necessary, arbitrary flange could be removed.

Damper blade overlaps

- For damper without flanges the open damper blade overlaps the damper body from dimension B = 250 by the value “c” or “a” and “c”. These values are specified in chapter Technical parameters → see pages 12 to 23.
- For damper with flanges the open damper blade overlaps the damper body from dimension B = 355 by the value “f” or “e” and “f”. These values are specified in chapter Technical parameters → see pages 12 to 23.

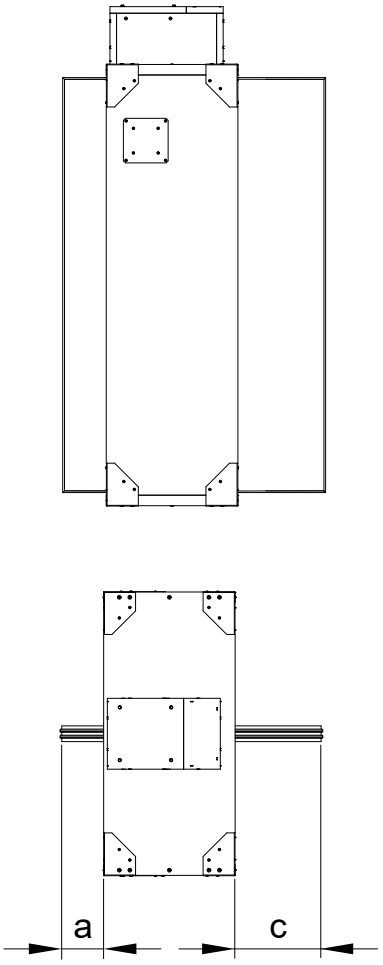

Values “a” and “c” - without flange

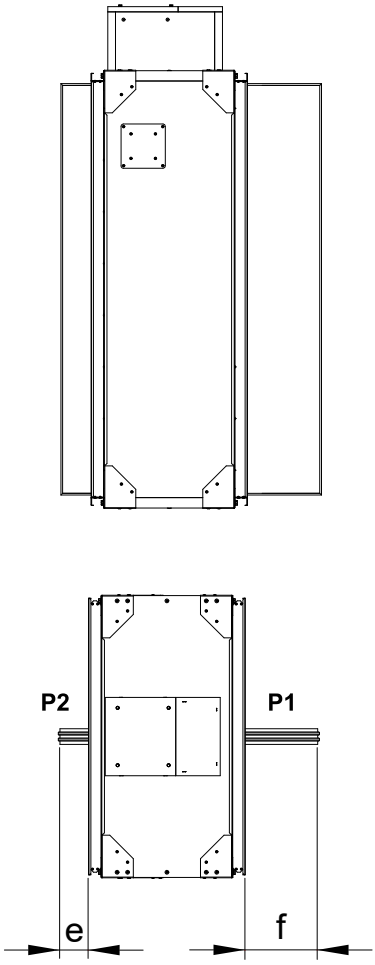

Values “e” and “f” - with flange

Values "a","c","e" and "f", has to be respected when projecting related smoke exhaust ducts.

Flange with corner hole

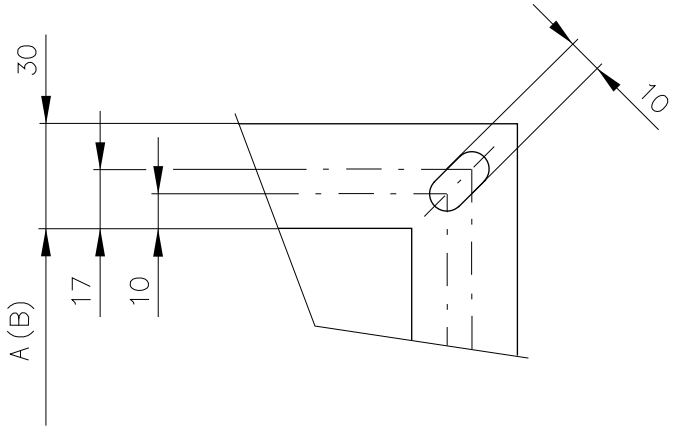

Flanges of dampers are 30 mm wide with oval hole.

Technical parameters

A x B [mm]		Damper blade overlaps without flanges		Damper blade overlaps with flanges		Weight [kg]		Effective area S_{ef} [m^2]	Actuating mechanism type
		a [mm]	c [mm]	e [mm]	f [mm]	Without flanges	With flanges		
180 x	180	-	-	-	-	32,6	34,9	0,0077	BELIMO BEN (15 N.m)
	200	-	-	-	-	33,5	35,8	0,0099	
	225	-	-	-	-	34,5	37	0,0127	
	250	-	-	-	-	35,6	38,2	0,0154	
	280	-	-	-	-	36,9	39,6	0,0187	
	300	-	-	-	-	37,7	40,5	0,0209	
	315	-	-	-	-	38,4	41,2	0,0226	
	355	-	6,5	-	-	40,1	43,1	0,0270	
	400	-	29	-	-	42,1	45,3	0,0319	
	450	-	54	-	4	44,2	47,6	0,0374	
	500	-	79	-	29	46,4	50	0,0429	
	550	-	104	-	54	48,5	52,3	0,0484	
	560	-	109	-	59	48,9	52,8	0,0495	
	600	-	129	-	79	50,6	54,6	0,0539	
	630	-	144	-	94	51,9	56	0,0572	
	650	-	154	-	104	52,7	57	0,0594	
	700	11	179	-	129	54,8	59,3	0,0649	
	710	16	184	-	134	55,3	59,8	0,0660	
	750	36	204	-	154	57	61,6	0,0704	
	800	61	229	11	179	59,3	64,2	0,0759	BELIMO BEE (25 N.m)
	900	111	279	61	229	63,5	68,9	0,0869	
	1000	161	329	111	279	67,8	73,5	0,0979	
200 x	180	-	-	-	-	33,4	35,8	0,0091	BELIMO BEN (15 N.m)
	200	-	-	-	-	34,3	36,7	0,0117	
	225	-	-	-	-	35,4	37,9	0,0150	
	250	-	-	-	-	36,5	39,1	0,0182	
	280	-	-	-	-	37,8	40,6	0,0221	
	300	-	-	-	-	38,7	41,5	0,0247	
	315	-	-	-	-	39,3	42,2	0,0267	
	355	-	6,5	-	-	41	44,1	0,0319	
	400	-	29	-	-	43,2	46,4	0,0377	
	450	-	54	-	4	45,3	48,8	0,0442	
	500	-	79	-	29	47,5	51,2	0,0507	
	550	-	104	-	54	49,7	53,6	0,0572	
	560	-	109	-	59	50,1	54,1	0,0585	
	600	-	129	-	79	51,8	56	0,0637	
	630	-	144	-	94	53,1	57,4	0,0676	
	650	-	154	-	104	54	58,4	0,0702	
	700	11	179	-	129	56,2	60,8	0,0767	
	710	16	184	-	134	56,6	61,2	0,0780	
	750	36	204	-	154	58,4	63,1	0,0832	
	800	61	229	11	179	60,8	65,7	0,0897	BELIMO BEE (25 N.m)
	900	111	279	61	229	65,1	70,5	0,1027	
	1000	161	329	111	279	69,4	75,3	0,1157	
225 x	180	-	-	-	-	34,5	36,9	0,0109	BELIMO BEN (15 N.m)
	200	-	-	-	-	35,4	37,9	0,0140	
	225	-	-	-	-	36,5	39,1	0,0178	
	250	-	-	-	-	37,6	40,3	0,0217	
	280	-	-	-	-	38,9	41,8	0,0264	
	300	-	-	-	-	39,8	42,8	0,0295	
	315	-	-	-	-	40,5	43,5	0,0318	
	355	-	6,5	-	-	42,3	45,5	0,0380	

Sizes listed within the maximum/minimum sizes can be manufactured on request.

A x B [mm]		Damper blade overlaps without flanges		Damper blade overlaps with flanges		Weight [kg]		Effective area S_{ef} [m²]	Actuating mechanism type
		a [mm]	c [mm]	e [mm]	f [mm]	Without flanges	With flanges		
225 x	400	-	29	-	-	44,5	47,8	0,0450	BELIMO BEN (15 N.m)
	450	-	54	-	4	46,7	50,3	0,0527	
	500	-	79	-	29	48,9	52,7	0,0605	
	550	-	104	-	54	51,2	55,2	0,0682	
	560	-	109	-	59	51,6	55,7	0,0698	
	600	-	129	-	79	53,4	57,6	0,0760	
	630	-	144	-	94	54,7	59,1	0,0806	
	650	-	154	-	104	55,6	60,1	0,0837	
	700	11	179	-	129	57,9	62,6	0,0915	
	710	16	184	-	134	58,3	63	0,0930	
	750	36	204	-	154	60,1	65	0,0992	
	800	61	229	11	179	62,6	67,7	0,1070	BELIMO BEE (25 N.m)
	900	111	279	61	229	67	72,6	0,1225	
	1000	161	329	111	279	71,5	77,5	0,1380	
250 x	180	-	-	-	-	35,5	38	0,0126	BELIMO BEN (15 N.m)
	200	-	-	-	-	36,4	39	0,0162	
	225	-	-	-	-	37,5	40,3	0,0207	
	250	-	-	-	-	38,7	41,6	0,0252	
	280	-	-	-	-	40,1	43,1	0,0306	
	300	-	-	-	-	41	44,1	0,0342	
	315	-	-	-	-	41,7	44,8	0,0369	
	355	-	6,5	-	-	43,5	46,8	0,0441	
	400	-	29	-	-	45,8	49,2	0,0522	
	450	-	54	-	4	48,1	51,8	0,0612	
	500	-	79	-	29	50,4	54,3	0,0702	
	550	-	104	-	54	52,7	56,8	0,0792	
	560	-	109	-	59	53,1	57,3	0,0810	
	600	-	129	-	79	55	59,3	0,0882	
	630	-	144	-	94	56,3	60,8	0,0936	
	650	-	154	-	104	57,3	61,8	0,0972	
	700	11	179	-	129	59,6	64,3	0,1062	
	710	16	184	-	134	60	64,8	0,1080	
	750	36	204	-	154	61,9	66,9	0,1152	
	800	61	229	11	179	64,4	69,6	0,1242	BELIMO BEE (25 N.m)
	900	111	279	61	229	69	74,6	0,1422	
	1000	161	329	111	279	73,6	79,7	0,1602	
280 x	180	-	-	-	-	36,9	39,6	0,0147	BELIMO BEN (15 N.m)
	200	-	-	-	-	37,8	40,6	0,0189	
	225	-	-	-	-	39	41,9	0,0242	
	250	-	-	-	-	40,2	43,2	0,0294	
	280	-	-	-	-	41,6	44,8	0,0357	
	300	-	-	-	-	42,6	45,8	0,0399	
	315	-	-	-	-	43,3	46,6	0,0431	
	355	-	6,5	-	-	45,2	48,6	0,0515	
	400	-	29	-	-	47,5	51,1	0,0609	
	450	-	54	-	4	49,9	53,7	0,0714	
	500	-	79	-	29	52,3	56,3	0,0819	
	550	-	104	-	54	54,7	58,9	0,0924	
	560	-	109	-	59	55,1	59,4	0,0945	
	600	-	129	-	79	57	61,5	0,1029	
	630	-	144	-	94	58,5	63,1	0,1092	

Sizes listed within the maximum/minimum sizes can be manufactured on request.

A x B [mm]		Damper blade overlaps without flanges		Damper blade overlaps with flanges		Weight [kg]		Effective area S_{ef} [m²]	Actuating mechanism type
		a [mm]	c [mm]	e [mm]	f [mm]	Without flanges	With flanges		
280 x	650	-	154	-	104	59,4	64,1	0,1134	BELIMO BEN (15 N.m)
	700	11	179	-	129	61,8	66,7	0,1239	
	710	16	184	-	134	62,3	67,2	0,1260	
	750	36	204	-	154	64,2	69,3	0,1344	
	800	61	229	11	179	66,8	72,1	0,1449	BELIMO BEE (25 N.m)
	900	111	279	61	229	71,5	77,3	0,1659	
	1000	161	329	111	279	76,3	82,5	0,1869	
300 x	180	-	-	-	-	37,7	40,5	0,0161	BELIMO BEN (15 N.m)
	200	-	-	-	-	38,7	41,5	0,0207	
	225	-	-	-	-	39,9	42,8	0,0265	
	250	-	-	-	-	41,1	44,2	0,0322	
	280	-	-	-	-	42,6	45,8	0,0391	
	300	-	-	-	-	43,5	46,8	0,0437	
	315	-	-	-	-	44,3	47,6	0,0472	
	355	-	6,5	-	-	46,2	49,7	0,0564	
	400	-	29	-	-	48,5	52,3	0,0667	
	450	-	54	-	4	51	54,9	0,0782	
	500	-	79	-	29	53,4	57,6	0,0897	
	550	-	104	-	54	55,9	60,2	0,1012	
	560	-	109	-	59	56,3	60,7	0,1035	
	600	-	129	-	79	58,3	62,8	0,1127	
	630	-	144	-	94	59,7	64,4	0,1196	
	650	-	154	-	104	60,7	65,5	0,1242	
	700	11	179	-	129	63,1	68,1	0,1357	
	710	16	184	-	134	63,6	68,7	0,1380	
	750	36	204	-	154	65,6	70,8	0,1472	
	800	61	229	11	179	68,2	73,7	0,1587	BELIMO BEE (25 N.m)
	900	111	279	61	229	73,1	78,9	0,1817	
	1000	161	329	111	279	78	84,2	0,2047	
315 x	180	-	-	-	-	38,3	41,1	0,0172	BELIMO BEN (15 N.m)
	200	-	-	-	-	39,3	42,2	0,0221	
	225	-	-	-	-	40,5	43,6	0,0282	
	250	-	-	-	-	41,8	44,9	0,0343	
	280	-	-	-	-	43,2	46,5	0,0417	
	300	-	-	-	-	44,2	47,6	0,0466	
	315	-	-	-	-	45	48,4	0,0502	
	355	-	6,5	-	-	47	50,5	0,0600	
	400	-	29	-	-	49,3	53,1	0,0711	
	450	-	54	-	4	51,8	55,8	0,0833	
	500	-	79	-	29	54,3	58,5	0,0956	
	550	-	104	-	54	56,7	61,2	0,1078	
	560	-	109	-	59	57,2	61,7	0,1103	
	600	-	129	-	79	59,2	63,8	0,1201	
	630	-	144	-	94	60,7	65,5	0,1274	
	650	-	154	-	104	61,7	66,5	0,1323	
	700	11	179	-	129	64,2	69,2	0,1446	
	710	16	184	-	134	64,7	69,8	0,1470	
	750	36	204	-	154	66,6	71,9	0,1568	
	800	61	229	11	179	69,3	74,8	0,1691	BELIMO BEE (25 N.m)
	900	111	279	61	229	74,3	80,2	0,1936	
	1000	161	329	111	279	79,2	85,6	0,2181	

Sizes listed within the maximum/minimum sizes can be manufactured on request.

A x B [mm]		Damper blade overlaps without flanges		Damper blade overlaps with flanges		Weight [kg]		Effective area S_{ef} [m²]	Actuating mechanism type
		a [mm]	c [mm]	e [mm]	f [mm]	Without flanges	With flanges		
355 x	180	-	-	-	-	39,9	42,9	0,0200	BELIMO BEN (15 N.m)
	200	-	-	-	-	41	44	0,0257	
	225	-	-	-	-	42,2	45,4	0,0328	
	250	-	-	-	-	43,5	46,8	0,0399	
	280	-	-	-	-	45,1	48,5	0,0485	
	300	-	-	-	-	46,1	49,6	0,0542	
	315	-	-	-	-	46,9	50,5	0,0584	
	355	-	6,5	-	-	48,9	52,7	0,0698	
	400	-	29	-	-	51,4	55,3	0,0827	
	450	-	54	-	4	54	58,1	0,0969	
	500	-	79	-	29	56,6	60,9	0,1112	
	550	-	104	-	54	59,1	63,7	0,1254	
	560	-	109	-	59	59,7	64,3	0,1283	
	600	-	129	-	79	61,7	66,5	0,1397	
	630	-	144	-	94	64,6	69,6	0,1482	
	650	-	154	-	104	65,7	70,7	0,1539	
	700	11	179	-	129	68,2	73,5	0,1682	
	710	16	184	-	134	68,7	74	0,1710	
	750	36	204	-	154	70,8	76,2	0,1824	
	800	61	229	11	179	73,6	79,3	0,1967	BELIMO BEE (25 N.m)
	900	111	279	61	229	78,8	84,8	0,2252	
	1000	161	329	111	279	83,9	90,4	0,2537	
400 x	180	-	-	-	-	41,7	44,9	0,0231	BELIMO BEN (15 N.m)
	200	-	-	-	-	42,8	46,1	0,0297	
	225	-	-	-	-	44,2	47,6	0,0380	
	250	-	-	-	-	45,5	49	0,0462	
	280	-	-	-	-	47,1	50,8	0,0561	
	300	-	-	-	-	48,2	51,9	0,0627	
	315	-	-	-	-	49	52,8	0,0677	
	355	-	6,5	-	-	51,2	55,1	0,0809	
	400	-	29	-	-	53,7	57,9	0,0957	
	450	-	54	-	4	56,4	60,8	0,1122	
	500	-	79	-	29	59,1	63,7	0,1287	
	550	-	104	-	54	61,8	66,6	0,1452	
	560	-	109	-	59	62,4	67,2	0,1485	
	600	-	129	-	79	64,5	69,5	0,1617	
	630	-	144	-	94	67,5	72,6	0,1716	
	650	-	154	-	104	68,6	73,8	0,1782	
	700	11	179	-	129	71,3	76,7	0,1947	
	710	16	184	-	134	71,8	77,3	0,1980	
	750	36	204	-	154	74	79,6	0,2112	
	800	61	229	11	179	76,9	82,7	0,2277	BELIMO BEE (25 N.m)
	900	111	279	61	229	82,3	88,5	0,2607	
	1000	161	329	111	279	87,7	94,4	0,2937	
450 x	180	-	-	-	-	43,8	47,2	0,0266	BELIMO BEN (15 N.m)
	200	-	-	-	-	44,9	48,4	0,0342	
	225	-	-	-	-	46,3	49,9	0,0437	
	250	-	-	-	-	47,7	51,4	0,0532	
	280	-	-	-	-	49,4	53,2	0,0646	
	300	-	-	-	-	50,5	54,5	0,0722	
	315	-	-	-	-	51,4	55,4	0,0779	

Sizes listed within the maximum/minimum sizes can be manufactured on request.

A x B [mm]		Damper blade overlaps without flanges		Damper blade overlaps with flanges		Weight [kg]		Effective area S_{ef} [m²]	Actuating mechanism type
		a [mm]	c [mm]	e [mm]	f [mm]	Without flanges	With flanges		
450 x	355	-	6,5	-	-	53,7	57,8	0,0931	BELIMO BEN (15 N.m)
	400	-	29	-	-	56,3	60,7	0,1102	
	450	-	54	-	4	59,2	63,7	0,1292	
	500	-	79	-	29	62	66,8	0,1482	
	550	-	104	-	54	64,8	69,8	0,1672	
	560	-	109	-	59	65,4	70,4	0,1710	
	600	-	129	-	79	67,6	72,8	0,1862	
	630	-	144	-	94	70,7	76	0,1976	
	650	-	154	-	104	71,8	77,3	0,2052	
	700	11	179	-	129	74,7	80,3	0,2242	
	710	16	184	-	134	75,2	80,9	0,2280	
	750	36	204	-	154	77,5	83,3	0,2432	
	800	61	229	11	179	80,5	86,6	0,2622	BELIMO BEE (25 N.m)
	900	111	279	61	229	86,2	92,7	0,3002	
	1000	161	329	111	279	91,8	98,7	0,3382	
500 x	180	-	-	-	-	45,8	49,4	0,0301	BELIMO BEN (15 N.m)
	200	-	-	-	-	47	50,7	0,0387	
	225	-	-	-	-	48,4	52,3	0,0495	
	250	-	-	-	-	49,9	53,9	0,0602	
	280	-	-	-	-	51,7	55,8	0,0731	
	300	-	-	-	-	52,9	57	0,0817	
	315	-	-	-	-	53,8	58	0,0882	
	355	-	6,5	-	-	56,1	60,5	0,1054	
	400	-	29	-	-	58,9	63,5	0,1247	
	450	-	54	-	4	61,9	66,7	0,1462	
	500	-	79	-	29	64,8	69,8	0,1677	
	550	-	104	-	54	67,8	73	0,1892	
	560	-	109	-	59	68,4	73,6	0,1935	
	600	-	129	-	79	70,8	76,2	0,2107	
	630	-	144	-	94	73,9	79,4	0,2236	
	650	-	154	-	104	75,1	80,7	0,2322	
	700	11	179	-	129	78	83,9	0,2537	
	710	16	184	-	134	78,6	84,5	0,2580	
	750	36	204	-	154	81	87,1	0,2752	
	800	61	229	11	179	84,2	90,4	0,2967	BELIMO BEE (25 N.m)
	900	111	279	61	229	90,1	96,8	0,3397	
	1000	161	329	111	279	96	103,1	0,3827	
550 x	180	-	-	-	-	47,8	51,7	0,0336	BELIMO BEN (15 N.m)
	200	-	-	-	-	49	53	0,0432	
	225	-	-	-	-	50,6	54,6	0,0552	
	250	-	-	-	-	52,1	56,3	0,0672	
	280	-	-	-	-	54	58,2	0,0816	
	300	-	-	-	-	55,2	59,6	0,0912	
	315	-	-	-	-	56,1	60,6	0,0984	
	355	-	6,5	-	-	58,6	63,2	0,1176	
	400	-	29	-	-	61,5	66,3	0,1392	
	450	-	54	-	4	64,6	69,6	0,1632	
	500	-	79	-	29	67,7	72,9	0,1872	
	550	-	104	-	54	70,8	76,2	0,2112	
	560	-	109	-	59	71,4	76,9	0,2160	
	600	-	129	-	79	73,9	79,5	0,2352	

Sizes listed within the maximum/minimum sizes can be manufactured on request.

A x B [mm]		Damper blade overlaps without flanges		Damper blade overlaps with flanges		Weight [kg]		Effective area S_{ef} [m²]	Actuating mechanism type
		a [mm]	c [mm]	e [mm]	f [mm]	Without flanges	With flanges		
550 x	630	-	144	-	94	77,1	82,9	0,2496	BELIMO BEN (15 N.m)
	650	-	154	-	104	78,3	84,2	0,2592	
	700	11	179	-	129	81,4	87,5	0,2832	
	710	16	184	-	134	82	88,1	0,2880	
	750	36	204	-	154	84,5	90,8	0,3072	
	800	61	229	11	179	87,8	94,3	0,3312	BELIMO BEE (25 N.m)
	900	111	279	61	229	94	100,9	0,3792	
	1000	161	329	111	279	101,9	109,2	0,4272	BELIMO BE (40 N.m)
560 x	180	-	-	-	-	48,2	52,1	0,0343	BELIMO BEN (15 N.m)
	200	-	-	-	-	49,5	53,4	0,0441	
	225	-	-	-	-	51	55,1	0,0564	
	250	-	-	-	-	52,6	56,8	0,0686	
	280	-	-	-	-	54,4	58,7	0,0833	
	300	-	-	-	-	55,7	60,1	0,0931	
	315	-	-	-	-	56,6	61,1	0,1005	
	355	-	6,5	-	-	59,1	63,7	0,1201	
	400	-	29	-	-	62,1	66,9	0,1421	
	450	-	54	-	4	65,2	70,2	0,1666	
	500	-	79	-	29	68,3	73,5	0,1911	
	550	-	104	-	54	71,4	76,9	0,2156	
	560	-	109	-	59	72	77,5	0,2205	
	600	-	129	-	79	74,5	80,2	0,2401	
	630	-	144	-	94	77,7	83,5	0,2548	
	650	-	154	-	104	79	84,9	0,2646	
	700	11	179	-	129	82,1	88,2	0,2891	
	710	16	184	-	134	82,7	88,9	0,2940	
	750	36	204	-	154	85,4	91,7	0,3136	BELIMO BEE (25 N.m)
	800	61	229	11	179	88,5	95,1	0,3381	
	900	111	279	61	229	94,8	101,7	0,3871	
	1000	161	329	111	279	102,7	110,1	0,4361	BELIMO BE (40 N.m)
600 x	180	-	-	-	-	49,8	53,9	0,0371	BELIMO BEN (15 N.m)
	200	-	-	-	-	51,1	55,3	0,0477	
	225	-	-	-	-	52,7	57	0,0610	
	250	-	-	-	-	54,3	58,7	0,0742	
	280	-	-	-	-	56,3	60,7	0,0901	
	300	-	-	-	-	57,6	62,1	0,1007	
	315	-	-	-	-	58,5	63,1	0,1087	
	355	-	6,5	-	-	61,1	65,9	0,1299	
	400	-	29	-	-	64,1	69,1	0,1537	
	450	-	54	-	4	67,4	72,6	0,1802	
	500	-	79	-	29	70,6	76	0,2067	
	550	-	104	-	54	73,8	79,4	0,2332	
	560	-	109	-	59	74,4	80,1	0,2385	
	600	-	129	-	79	77	82,8	0,2597	
	630	-	144	-	94	80,3	86,3	0,2756	
	650	-	154	-	104	81,6	87,6	0,2862	
	700	11	179	-	129	84,8	91,1	0,3127	
	710	16	184	-	134	85,4	91,8	0,3180	
	750	36	204	-	154	88,2	94,7	0,3392	BELIMO BEE (25 N.m)
	800	61	229	11	179	91,5	98,2	0,3657	
	900	111	279	61	229	97,9	105	0,4187	

Sizes listed within the maximum/minimum sizes can be manufactured on request.

A x B [mm]		Damper blade overlaps without flanges		Damper blade overlaps with flanges		Weight [kg]		Effective area S_{ef} [m²]	Actuating mechanism type
		a [mm]	c [mm]	e [mm]	f [mm]	Without flanges	With flanges		
600 x	1000	161	329	111	279	106	113,6	0,4717	BELIMO BE (40 N.m)
630 x	180	-	-	-	-	51	55,2	0,0392	BELIMO BEN (15 N.m)
	200	-	-	-	-	52,4	56,6	0,0504	
	225	-	-	-	-	54	58,4	0,0644	
	250	-	-	-	-	55,7	60,1	0,0784	
	280	-	-	-	-	57,6	62,2	0,0952	
	300	-	-	-	-	59	63,6	0,1064	
	315	-	-	-	-	59,9	64,7	0,1148	
	355	-	6,5	-	-	62,6	67,5	0,1372	
	400	-	29	-	-	65,7	70,8	0,1624	
	450	-	54	-	4	69	74,3	0,1904	
	500	-	79	-	29	72,3	77,8	0,2184	
	550	-	104	-	54	75,6	81,3	0,2464	
	560	-	109	-	59	76,2	82	0,2520	
	600	-	129	-	79	78,9	84,8	0,2744	
	630	-	144	-	94	82,2	88,3	0,2912	
	650	-	154	-	104	83,5	89,7	0,3024	
	700	11	179	-	129	86,8	93,2	0,3304	
	710	16	184	-	134	87,5	93,9	0,3360	
	750	36	204	-	154	90,3	97	0,3584	BELIMO BEE (25 N.m)
	800	61	229	11	179	93,6	100,5	0,3864	
	900	111	279	61	229	100,2	107,5	0,4424	
	1000	161	329	111	279	108,5	116,2	0,4984	BELIMO BE (40 N.m)
650 x	180	-	-	-	-	51,9	56,1	0,0406	BELIMO BEN (15 N.m)
	200	-	-	-	-	53,2	57,5	0,0522	
	225	-	-	-	-	54,9	59,3	0,0667	
	250	-	-	-	-	56,5	61,1	0,0812	
	280	-	-	-	-	58,6	63,2	0,0986	
	300	-	-	-	-	59,9	64,7	0,1102	
	315	-	-	-	-	60,9	65,7	0,1189	
	355	-	6,5	-	-	63,6	68,6	0,1421	
	400	-	29	-	-	66,7	71,9	0,1682	
	450	-	54	-	4	70,1	75,5	0,1972	
	500	-	79	-	29	73,4	79,1	0,2262	
	550	-	104	-	54	76,8	82,6	0,2552	
	560	-	109	-	59	77,4	83,3	0,2610	
	600	-	129	-	79	80,1	86,2	0,2842	
	630	-	144	-	94	83,5	89,7	0,3016	
	650	-	154	-	104	84,8	91,1	0,3132	
	700	11	179	-	129	88,2	94,7	0,3422	
	710	16	184	-	134	88,9	95,4	0,3480	
	750	36	204	-	154	91,8	98,4	0,3712	BELIMO BEE (25 N.m)
	800	61	229	11	179	95,1	102	0,4002	
	900	111	279	61	229	103,5	110,8	0,4582	BELIMO BE (40 N.m)
	1000	161	329	111	279	110,2	117,9	0,5162	
700 x	180	-	-	-	-	53,9	58,4	0,0441	BELIMO BEN (15 N.m)
	200	-	-	-	-	55,3	59,8	0,0567	
	225	-	-	-	-	57	61,7	0,0725	
	250	-	-	-	-	58,7	63,5	0,0882	
	280	-	-	-	-	60,8	65,7	0,1071	
	300	-	-	-	-	62,2	67,2	0,1197	

Sizes listed within the maximum/minimum sizes can be manufactured on request.

A x B [mm]		Damper blade overlaps without flanges		Damper blade overlaps with flanges		Weight [kg]		Effective area S_{ef} [m²]	Actuating mechanism type
		a [mm]	c [mm]	e [mm]	f [mm]	Without flanges	With flanges		
700 x	315	-	-	-	-	63,3	68,3	0,1292	BELIMO BEN (15 N.m)
	355	-	6,5	-	-	66	71,3	0,1544	
	400	-	29	-	-	69,3	74,7	0,1827	
	450	-	54	-	4	72,8	78,4	0,2142	
	500	-	79	-	29	76,3	82,1	0,2457	
	550	-	104	-	54	79,8	85,8	0,2772	
	560	-	109	-	59	80,5	86,6	0,2835	
	600	-	129	-	79	83,2	89,5	0,3087	
	630	-	144	-	94	86,9	93,3	0,3276	BELIMO BEE (25 N.m)
	650	-	154	-	104	88,3	94,8	0,3402	
	700	11	179	-	129	91,8	98,5	0,3717	
	710	16	184	-	134	92,5	99,2	0,3780	
	750	36	204	-	154	95,3	102,2	0,4032	
	800	61	229	11	179	98,7	105,9	0,4347	
	900	111	279	61	229	107,4	114,9	0,4977	BELIMO BE (40 N.m)
	1000	161	329	111	279	114,3	122,3	0,5607	
710 x	180	-	-	-	-	54,3	58,8	0,0448	BELIMO BEN (15 N.m)
	200	-	-	-	-	55,7	60,3	0,0576	
	225	-	-	-	-	57,4	62,2	0,0736	
	250	-	-	-	-	59,2	64	0,0896	
	280	-	-	-	-	61,3	66,2	0,1088	
	300	-	-	-	-	62,7	67,7	0,1216	
	315	-	-	-	-	63,7	68,8	0,1312	
	355	-	6,5	-	-	66,5	71,8	0,1568	
	400	-	29	-	-	69,9	75,3	0,1856	
	450	-	54	-	4	73,4	79	0,2176	
	500	-	79	-	29	76,9	82,7	0,2496	
	550	-	104	-	54	80,4	86,5	0,2816	
	560	-	109	-	59	81,1	87,2	0,2880	
	600	-	129	-	79	83,9	90,2	0,3136	
	630	-	144	-	94	87,6	94	0,3328	BELIMO BEE (25 N.m)
	650	-	154	-	104	89	95,5	0,3456	
	700	11	179	-	129	92,5	99,2	0,3776	
	710	16	184	-	134	93,2	100	0,3840	
	750	36	204	-	154	96	102,9	0,4096	
	800	61	229	11	179	99,5	106,6	0,4416	
	900	111	279	61	229	108,2	115,8	0,5056	BELIMO BE (40 N.m)
	1000	161	329	111	279	115,2	123,2	0,5696	
750 x	180	-	-	-	-	55,9	60,6	0,0476	BELIMO BEN (15 N.m)
	200	-	-	-	-	57,4	62,1	0,0612	
	225	-	-	-	-	59,2	64	0,0782	
	250	-	-	-	-	61	66	0,0952	
	280	-	-	-	-	63,1	68,2	0,1156	
	300	-	-	-	-	64,6	69,8	0,1292	
	315	-	-	-	-	65,6	70,9	0,1394	
	355	-	6,5	-	-	68,5	74	0,1666	
	400	-	29	-	-	71,9	77,6	0,1972	
	450	-	54	-	4	75,5	81,4	0,2312	
	500	-	79	-	29	79,1	85,2	0,2652	
	550	-	104	-	54	82,8	89	0,2992	
	560	-	109	-	59	83,5	89,8	0,3060	

Sizes listed within the maximum/minimum sizes can be manufactured on request.

A x B [mm]		Damper blade overlaps without flanges		Damper blade overlaps with flanges		Weight [kg]		Effective area S_{ef} [m²]	Actuating mechanism type
		a [mm]	c [mm]	e [mm]	f [mm]	Without flanges	With flanges		
750 x	600	-	129	-	79	86,4	92,8	0,3332	BELIMO BEN (15 N.m)
	630	-	144	-	94	90,1	96,7	0,3536	BELIMO BEE (25 N.m)
	650	-	154	-	104	91,6	98,3	0,3672	
	700	11	179	-	129	95,2	102,1	0,4012	
	710	16	184	-	134	95,9	102,8	0,4080	
	750	36	204	-	154	98,8	105,9	0,4352	
	800	61	229	11	179	104,1	111,4	0,4692	BELIMO BE (40 N.m)
	900	111	279	61	229	111,3	119,1	0,5372	
	1000	161	329	111	279	118,5	126,7	0,6052	
800 x	180	-	-	-	-	57,9	62,8	0,0511	BELIMO BEN (15 N.m)
	200	-	-	-	-	59,4	64,4	0,0657	
	225	-	-	-	-	61,3	66,4	0,0840	
	250	-	-	-	-	63,2	68,4	0,1022	
	280	-	-	-	-	65,4	70,7	0,1241	
	300	-	-	-	-	66,9	72,3	0,1387	
	315	-	-	-	-	68	73,5	0,1497	
	355	-	6,5	-	-	71	76,7	0,1789	
	400	-	29	-	-	74,5	80,4	0,2117	
	450	-	54	-	4	78,3	84,3	0,2482	
	500	-	79	-	29	82	88,3	0,2847	
	550	-	104	-	54	85,7	92,2	0,3212	
	560	-	109	-	59	86,5	93	0,3285	
	600	-	129	-	79	89,7	96,4	0,3577	BELIMO BEE (25 N.m)
	630	-	144	-	94	93,3	100,1	0,3796	
	650	-	154	-	104	94,8	101,7	0,3942	
	700	11	179	-	129	98,5	105,7	0,4307	
	710	16	184	-	134	99,3	106,5	0,4380	
	750	36	204	-	154	104	111,3	0,4672	BELIMO BE (40 N.m)
	800	61	229	11	179	107,7	115,3	0,5037	
	900	111	279	61	229	115,2	123,2	0,5767	
	1000	161	329	111	279	122,7	131,1	0,6497	
900 x	180	-	-	-	-	62	67,3	0,0581	BELIMO BEN (15 N.m)
	200	-	-	-	-	63,6	69	0,0747	
	225	-	-	-	-	65,6	71,1	0,0955	
	250	-	-	-	-	67,6	73,2	0,1162	
	280	-	-	-	-	70	75,7	0,1411	
	300	-	-	-	-	71,6	77,4	0,1577	
	315	-	-	-	-	72,8	78,7	0,1702	
	355	-	6,5	-	-	77,3	83,4	0,2034	
	400	-	29	-	-	81,1	87,4	0,2407	
	450	-	54	-	4	85,1	91,6	0,2822	
	500	-	79	-	29	89,3	96	0,3237	BELIMO BEE (25 N.m)
	550	-	104	-	54	93,3	100,2	0,3652	
	560	-	109	-	59	94,1	101,1	0,3735	
	600	-	129	-	79	97,3	104,4	0,4067	
	630	-	144	-	94	99,7	107	0,4316	
	650	-	154	-	104	101,3	108,6	0,4482	
	700	11	179	-	129	107	114,6	0,4897	BELIMO BE (40 N.m)
	710	16	184	-	134	107,8	115,4	0,4980	
	750	36	204	-	154	111	118,8	0,5312	
	800	61	229	11	179	115	123	0,5727	

Sizes listed within the maximum/minimum sizes can be manufactured on request.

A x B [mm]		Damper blade overlaps without flanges		Damper blade overlaps with flanges		Weight [kg]		Effective area S_{ef} [m²]	Actuating mechanism type
		a [mm]	c [mm]	e [mm]	f [mm]	Without flanges	With flanges		
900 x	900	111	279	61	229	123	131,4	0,6557	BELIMO BE (40 N.m)
	1000	161	329	111	279	131	139,8	0,7387	
1000 x	180	-	-	-	-	66	71,8	0,0651	BELIMO BEN (15 N.m)
	200	-	-	-	-	67,7	73,6	0,0837	
	225	-	-	-	-	69,9	75,8	0,1070	
	250	-	-	-	-	72	78	0,1302	
	280	-	-	-	-	74,5	80,7	0,1581	
	300	-	-	-	-	76,2	82,5	0,1767	
	315	-	-	-	-	77,5	83,9	0,1907	
	355	-	6,5	-	-	82,3	88,8	0,2279	
	400	-	29	-	-	86,3	93	0,2697	
	450	-	54	-	4	90,8	97,7	0,3162	BELIMO BEE (25 N.m)
	500	-	79	-	29	95	102,2	0,3627	
	550	-	104	-	54	99,3	106,6	0,4092	
	560	-	109	-	59	100,1	107,5	0,4185	
	600	-	129	-	79	103,6	111,1	0,4557	
	630	-	144	-	94	106,1	113,8	0,4836	
	650	-	154	-	104	107,8	115,6	0,5022	
	700	11	179	-	129	113,8	121,7	0,5487	BELIMO BE (40 N.m)
	710	16	184	-	134	114,6	122,6	0,5580	
	750	36	204	-	154	118	126,2	0,5952	
	800	61	229	11	179	122,3	130,7	0,6417	
	900	111	279	61	229	130,8	139,6	0,7347	
	1000	161	329	111	279	139,4	148,7	0,8277	
1100 x	180	-	-	-	-	70,1	76,3	0,0721	BELIMO BEN (15 N.m)
	200	-	-	-	-	71,9	78,2	0,0927	
	225	-	-	-	-	74,1	80,5	0,1185	
	250	-	-	-	-	76,4	82,9	0,1442	
	280	-	-	-	-	79,1	85,7	0,1751	
	300	-	-	-	-	80,9	87,6	0,1957	
	315	-	-	-	-	82,3	89	0,2112	
	355	-	6,5	-	-	87,3	94,2	0,2524	
	400	-	29	-	-	91,7	98,8	0,2987	BELIMO BEE (25 N.m)
	450	-	54	-	4	96,2	103,6	0,3502	
	500	-	79	-	29	100,7	108,3	0,4017	
	550	-	104	-	54	105,3	113	0,4532	
	560	-	109	-	59	106,2	114	0,4635	
	600	-	129	-	79	109,8	117,8	0,5047	
	630	-	144	-	94	114,2	122,3	0,5356	BELIMO BE (40 N.m)
	650	-	154	-	104	116	124,2	0,5562	
	700	11	179	-	129	120,5	128,9	0,6077	
	710	16	184	-	134	121,4	129,9	0,6180	
	750	36	204	-	154	125	133,7	0,6592	
	800	61	229	11	179	129,6	138,4	0,7107	
	900	111	279	61	229	138,6	147,9	0,8137	
	1000	161	329	111	279	147,7	157,4	0,9167	
1250 x	180	-	-	-	-	76,1	83	0,0826	BELIMO BEN (15 N.m)
	200	-	-	-	-	78,1	85	0,1062	
	225	-	-	-	-	80,6	87,6	0,1357	
	250	-	-	-	-	83	90,1	0,1652	
	280	-	-	-	-	86	93,2	0,2006	

Sizes listed within the maximum/minimum sizes can be manufactured on request.

A x B [mm]		Damper blade overlaps without flanges		Damper blade overlaps with flanges		Weight [kg]		Effective area S_{ef} [m²]	Actuating mechanism type
		a [mm]	c [mm]	e [mm]	f [mm]	Without flanges	With flanges		
1250 x	300	-	-	-	-	87,9	95,3	0,2242	BELIMO BEN (15 N.m)
	315	-	-	-	-	89,4	96,8	0,2419	
	355	-	6,5	-	-	94,9	102,5	0,2891	BELIMO BEE (25 N.m)
	400	-	29	-	-	99,5	107,3	0,3422	
	450	-	54	-	4	104,4	112,4	0,4012	
	500	-	79	-	29	109,3	117,5	0,4602	
	550	-	104	-	54	114,2	122,6	0,5192	
	560	-	109	-	59	115,2	123,7	0,5310	
	600	-	129	-	79	120,8	129,5	0,5782	BELIMO BE (40 N.m)
	630	-	144	-	94	123,8	132,5	0,6136	
	650	-	154	-	104	125,8	134,6	0,6372	
	700	11	179	-	129	130,7	139,7	0,6962	
	710	16	184	-	134	131,6	140,7	0,7080	
	750	36	204	-	154	135,6	144,8	0,7552	
	800	61	229	11	179	140,6	150,1	0,8142	
	900	111	279	61	229	150,4	160,3	0,9322	
	1000	161	329	111	279	168,8	179,2	1,0502	SCHISCHEK InMax 50.75 (75 N.m)
1400 x	180	-	-	-	-	82,2	89,7	0,0931	BELIMO BEN (15 N.m)
	200	-	-	-	-	84,3	91,9	0,1197	
	225	-	-	-	-	87	94,6	0,1530	
	250	-	-	-	-	89,6	97,4	0,1862	
	280	-	-	-	-	92,8	100,7	0,2261	
	300	-	-	-	-	94,9	102,9	0,2527	
	315	-	-	-	-	96,5	104,6	0,2727	
	355	-	6,5	-	-	102,4	110,6	0,3259	BELIMO BEE (25 N.m)
	400	-	29	-	-	107,3	115,7	0,3857	
	450	-	54	-	4	112,6	121,2	0,4522	
	500	-	79	-	29	117,9	126,7	0,5187	
	550	-	104	-	54	123,2	132,3	0,5852	
	560	-	109	-	59	126	135,1	0,5985	BELIMO BE (40 N.m)
	600	-	129	-	79	130,2	139,5	0,6517	
	630	-	144	-	94	133,4	142,8	0,6916	
	650	-	154	-	104	135,5	145	0,7182	
	700	11	179	-	129	140,8	150,5	0,7847	
	710	16	184	-	134	141,9	151,6	0,7980	
	750	36	204	-	154	146,2	156,1	0,8512	
	800	61	229	11	179	151,5	161,6	0,9177	
	900	111	279	61	229	170,7	181,3	1,0507	SCHISCHEK InMax 50.75 (75 N.m)
	1000	161	329	111	279	181,3	192,3	1,1837	
1500 x	180	-	-	-	-	86,3	94,2	0,1001	BELIMO BEN (15 N.m)
	200	-	-	-	-	88,5	96,5	0,1287	
	225	-	-	-	-	91,3	99,4	0,1645	
	250	-	-	-	-	94,1	102,2	0,2002	
	280	-	-	-	-	97,4	105,7	0,2431	
	300	-	-	-	-	99,6	108	0,2717	
	315	-	-	-	-	101,5	110	0,2932	BELIMO BEE (25 N.m)
	355	-	6,5	-	-	107,3	116	0,3504	
	400	-	29	-	-	112,5	121,3	0,4147	
	450	-	54	-	4	118,1	127,1	0,4862	
	500	-	79	-	29	123,6	132,9	0,5577	
	550	-	104	-	54	130,9	140,4	0,6292	BELIMO BE (40 N.m)

Sizes listed within the maximum/minimum sizes can be manufactured on request.

A x B [mm]		Damper blade overlaps without flanges		Damper blade overlaps with flanges		Weight [kg]		Effective area S_{ef} [m²]	Actuating mechanism type
		a [mm]	c [mm]	e [mm]	f [mm]	Without flanges	With flanges		
1500 x	560	-	109	-	59	132	141,5	0,6435	BELIMO BE (40 N.m)
	600	-	129	-	79	136,4	146,1	0,7007	
	630	-	144	-	94	139,8	149,6	0,7436	
	650	-	154	-	104	142	151,9	0,7722	
	700	11	179	-	129	147,7	157,8	0,8437	
	710	16	184	-	134	148,8	158,9	0,8580	
	750	36	204	-	154	153,2	163,6	0,9152	
	800	61	229	11	179	158,8	169,3	0,9867	
	900	111	279	61	229	178,5	189,5	1,1297	SCHISCHEK InMax 50.75 (75 N.m)
	1000	161	329	111	279	189,7	201,1	1,2727	
1600 x	180	-	-	-	-	90,3	98,6	0,1071	BELIMO BEN (15 N.m)
	200	-	-	-	-	92,6	101	0,1377	
	225	-	-	-	-	95,6	104,1	0,1760	
	250	-	-	-	-	98,5	107,1	0,2142	
	280	-	-	-	-	102	110,7	0,2601	
	300	-	-	-	-	104,5	113,3	0,2907	BELIMO BEE (25 N.m)
	315	-	-	-	-	106,3	115,2	0,3137	
	355	-	6,5	-	-	112,3	121,4	0,3749	
	400	-	29	-	-	117,7	126,9	0,4437	
	450	-	54	-	4	123,5	133	0,5202	
	500	-	79	-	29	131	140,7	0,5967	BELIMO BE (40 N.m)
	550	-	104	-	54	136,9	146,8	0,6732	
	560	-	109	-	59	138	148	0,6885	
	600	-	129	-	79	142,7	152,8	0,7497	
	630	-	144	-	94	146,3	156,5	0,7956	
	650	-	154	-	104	148,6	158,9	0,8262	
	700	11	179	-	129	154,4	165	0,9027	
	710	16	184	-	134	155,6	166,2	0,9180	
	750	36	204	-	154	160,2	171	0,9792	
	800	61	229	11	179	166,1	177	1,0557	
	900	111	279	61	229	186,3	197,7	1,2087	SCHISCHEK InMax 50.75 (75 N.m)
	1000	161	329	111	279	198	209,8	1,3617	

Sizes listed within the maximum/minimum sizes can be manufactured on request.

IV. INSTALLATION

Placement and installation

- Dampers are designed to remove heat and combustion products (e.g. smoke) from fire compartments
- Dampers are suitable for installation in vertical and horizontal position passages of fire separating constructions. The damper installation procedures must be done so that all load transfer from the fire separating constructions to the damper is absolutely excluded.
- Following air-conditioning duct must be suspended or supported so that all load transfer from the following duct to the damper flange is absolutely excluded.
- The gap between the installed damper and the fire separating construction must be perfectly filled with approved material.
- After installing the damper, the damper blades must only be opened, or closed by operation of the actuator only.
- The distance between the damper and the construction (wall, ceiling) must be 75 mm at the minimum, according to BS EN 1366-2. If two or more dampers are to be installed in one fire separating construction, the distance between adjacent dampers must be 200 mm at the minimum, according to BS EN 1366-10.
- To provide the necessary space for access to the control device, it is recommended that other objects be at least 350 mm away from the control parts of the damper.

Minimum distance between the dampers and the construction

- minimum distance 200 mm between dampers, according to BS EN 1366-10
- minimum distance 75 mm between damper and construction (wall/ceiling), according to BS EN 1366-10

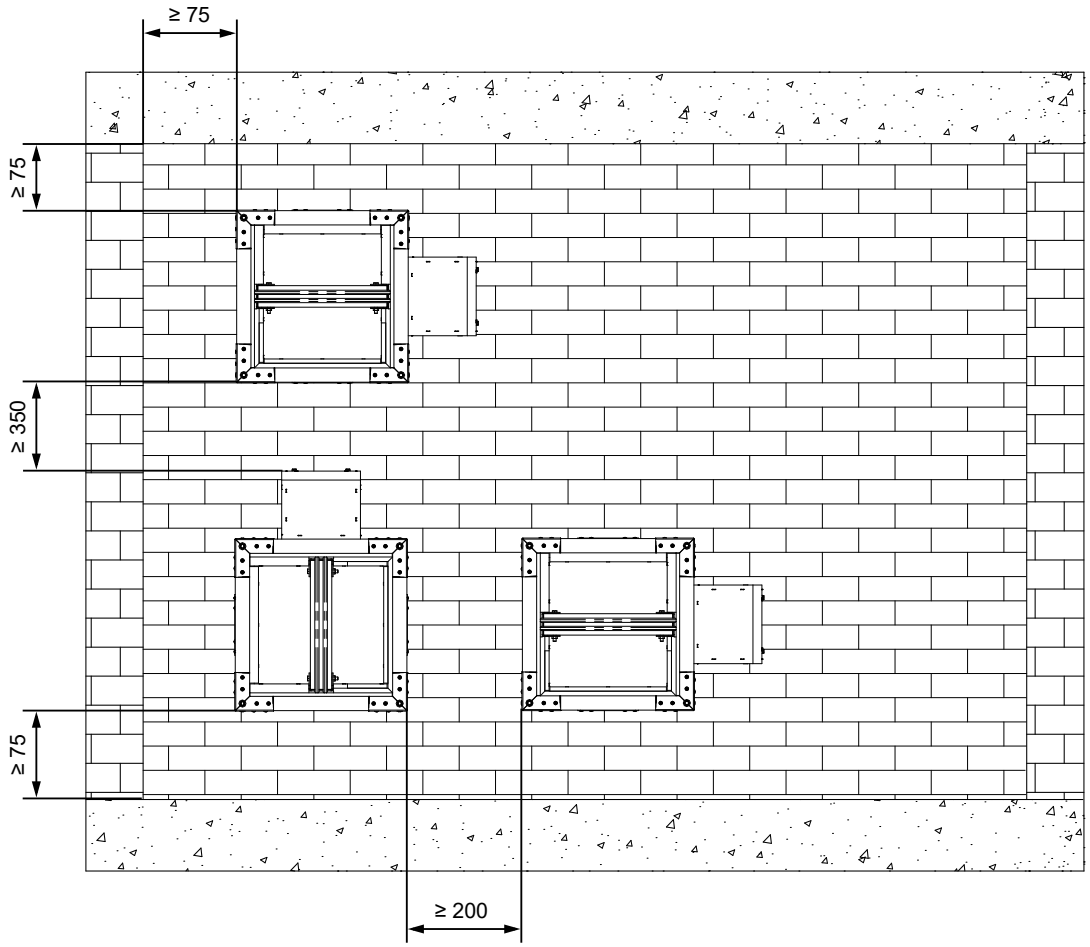

- This is the BS EN1366-2 test standard distances. They are considered as minimum. Actual location should be based on wall manufacturers requirements.
- Always consult the wall manufacturers specific guidelines for deflection heads, penetration size, location to other services, fire stopping and load bearing capacity.
- With smoke control ducting then refer to duct manufacturers tested parameters for spacing & pattress requirements.
- No other services should pass through the dampers building work opening.

Dimensions of an installation opening
ABLATIVE COATED BATT

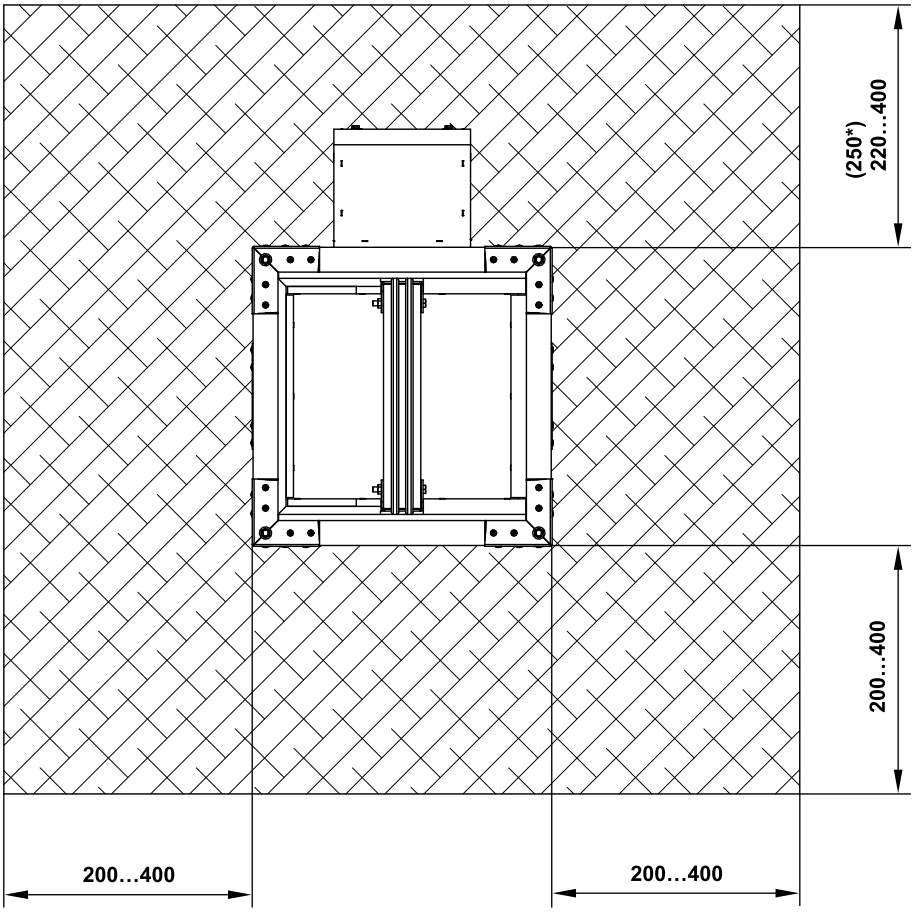

* **Dimensions with actuating mechanism InMax 50.75S.**

Statement of installations

Type of construction		Min. thickness of construction [mm]	Penetration seal	Classification	Page
In solid wall construction		100	Ablative Coated Batt	EI 120 (v_{ew} i↔o) S1500C_{mod}HOT 400/30MAmulti	26
In gypsum wall construction		100			27
In solid ceiling construction		150		EI 120 (h_{ow} i↔o) S1500C_{mod}HOT 400/30AAmulti	28
Battery in solid wall construction	2 dampers side by side	100		EI 120 (v_{ew} i↔o) S1500C_{mod}HOT 400/30MAmulti	29
	2 dampers on top of each other				31
Battery in gypsum wall construction	2 dampers side by side	100			30
	4 dampers				32
Horizontal or vertical smoke extraction ducts		Connection to single or multi compartment smoke extraction ducts tested according to BS EN 1366-8 or BS EN 1366-9		EI 120 (h_{od}-v_{ed} i↔o) S1000C_{mod}HOT 400/30MAmulti	33-34

Images of plasterboard construction according to Rigips instructions (substitutes can be used such as British Gypsum, Knauf or Lafarge products that are the same overall wall thickness & EI performance on both sides).

The smoke control damper can be integrated into a gypsum wall construction with fire classification EI120 or EI 90.

Installation in solid wall construction of fire compartment

Solid wall - Ablative Coated Batt - vertical blade axis position

EI 120 S

- For connection following duct → see pages 42 to 44
- Examples of anchors to the fire dividing construction → see pages 39 to 41

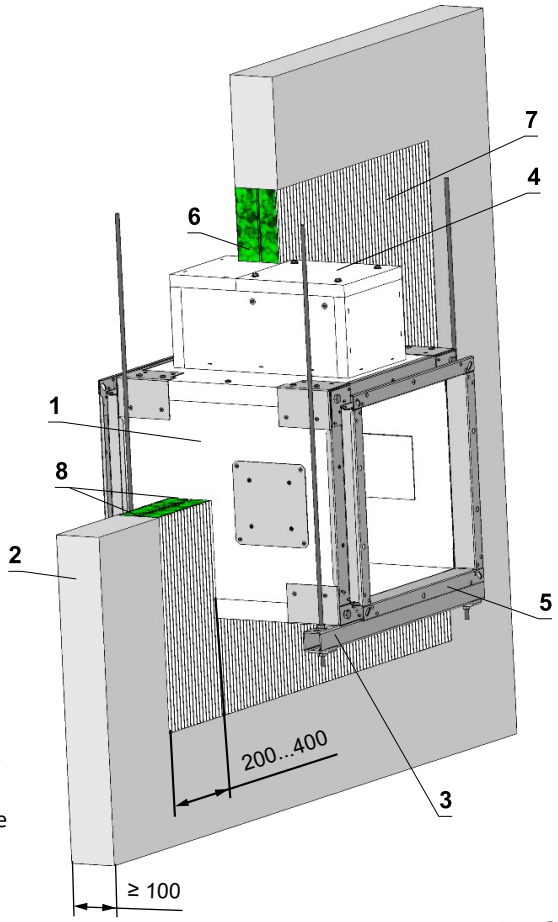

1 SEDM
2 Solid wall construction
3 Profile with threaded rod → see pages 33 to 36
4 Actuator cover - must be removable after installation of the damper
5 Flange
Ablative Coated Batt System HILTI
6 Mineral wool board - min. density 140 kg/m³ (HILTI CFS-CT B 1S 140/50...)
7 Fire stop coating - th. 1 mm (HILTI CFS-CT...) - coating is overcoated on the support construction and on the damper casing/duct.
8 Fire-resistant mastic - (HILTI CFS-S ACR...) fill the gap from both sides of the fire separation construction and around the perimeter of penetration and damper casing.

Solid wall - Ablative Coated Batt - horizontal blade axis position

EI 120 S

- For connection following duct → see pages 42 to 44
- Examples of anchors to the fire dividing construction → see pages 39 to 41

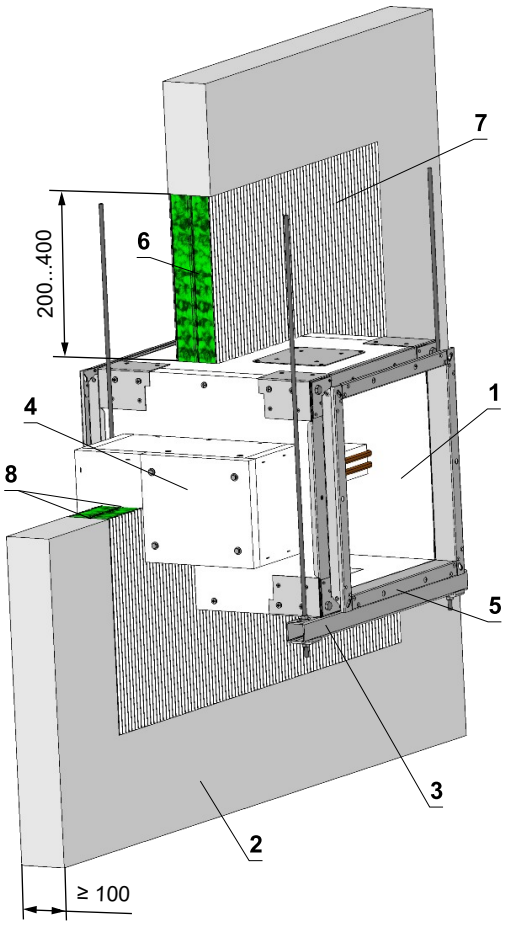

1 SEDM
2 Solid wall construction
3 Profile with threaded rod → see pages 33 to 36
4 Actuator cover - must be removable after installation of the damper
5 Flange
Ablative Coated Batt System HILTI
6 Mineral wool board - min. density 140 kg/m³ (HILTI CFS-CT B 1S 140/50...)
7 Fire stop coating - th. 1 mm (HILTI CFS-CT...) - coating is overcoated on the support construction and on the damper casing/duct.
8 Fire-resistant mastic - (HILTI CFS-S ACR...) fill the gap from both sides of the fire separation construction and around the perimeter of penetration and damper casing.

Installation in gypsum wall construction of fire compartment

Gypsum wall - Ablative Coated Batt - vertical blade axis position

EI 120 S

- For connection following duct → see pages 42 to 44
- Examples of anchors to the fire dividing construction → see pages 39 to 41

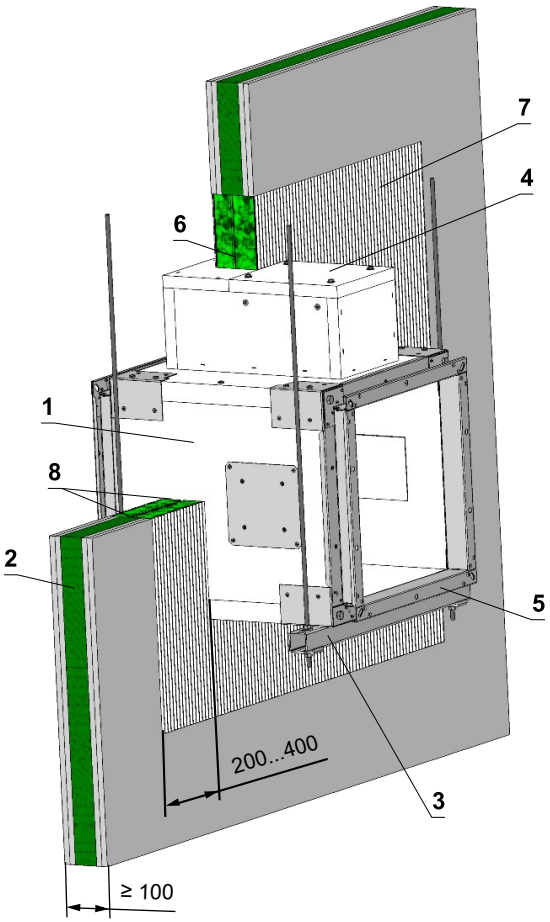

1 SEDM
2 Gypsum wall construction
3 Profile with threaded rod → see pages 33 to 36
4 Actuator cover - must be removable after installation of the damper
5 Flange
Ablative Coated Batt System HILTI
6 Mineral wool board - min. density 140 kg/m³ (HILTI CFS-CT B 1S 140/50...)
7 Fire stop coating - th. 1 mm (HILTI CFS-CT...) - coating is overcoated on the support construction and on the damper casing/duct.
8 Fire-resistant mastic - (HILTI CFS-S ACR...) fill the gap from both sides of the fire separation construction and around the perimeter of penetration and damper casing.

Gypsum wall - Ablative Coated Batt - horizontal blade axis position

EI 120 S

- For connection following duct → see pages 42 to 44
- Examples of anchors to the fire dividing construction → see pages 39 to 41

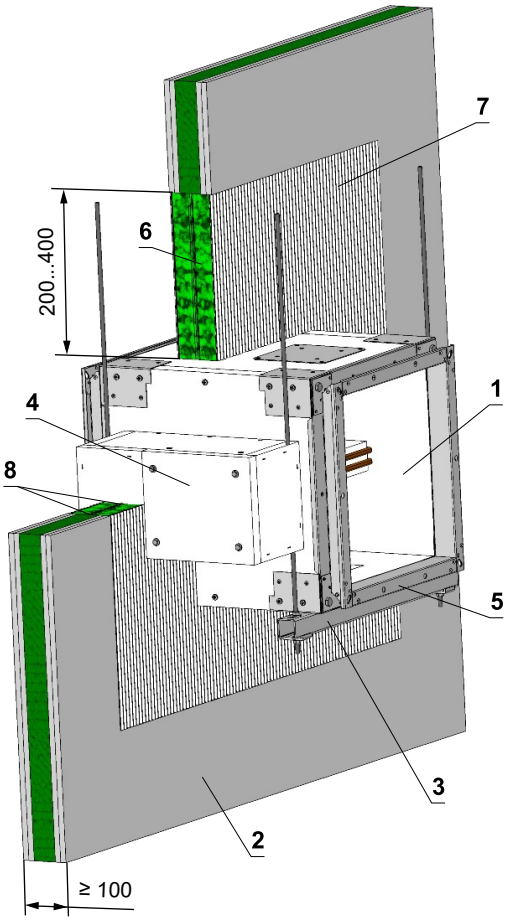

1 SEDM
2 Gypsum wall construction
3 Profile with threaded rod → see pages 33 to 36
4 Actuator cover - must be removable after installation of the damper
5 Flange
Ablative Coated Batt System HILTI
6 Mineral wool board - min. density 140 kg/m³ (HILTI CFS-CT B 1S 140/50...)
7 Fire stop coating - th. 1 mm (HILTI CFS-CT...) - coating is overcoated on the support construction and on the damper casing/duct.
8 Fire-resistant mastic - (HILTI CFS-S ACR...) fill the gap from both sides of the fire separation construction and around the perimeter of penetration and damper casing.

Installation in solid ceiling construction of fire compartment

In solid ceiling construction - Ablative Coated Batt - actuator under ceiling

EI 120 S

- For connection of following duct → see pages 42 to 44
- Examples of anchors to the fire dividing construction → see pages 39 to 41
- Number of L-holders and their placement, acc. to AxB dimension → see page 37

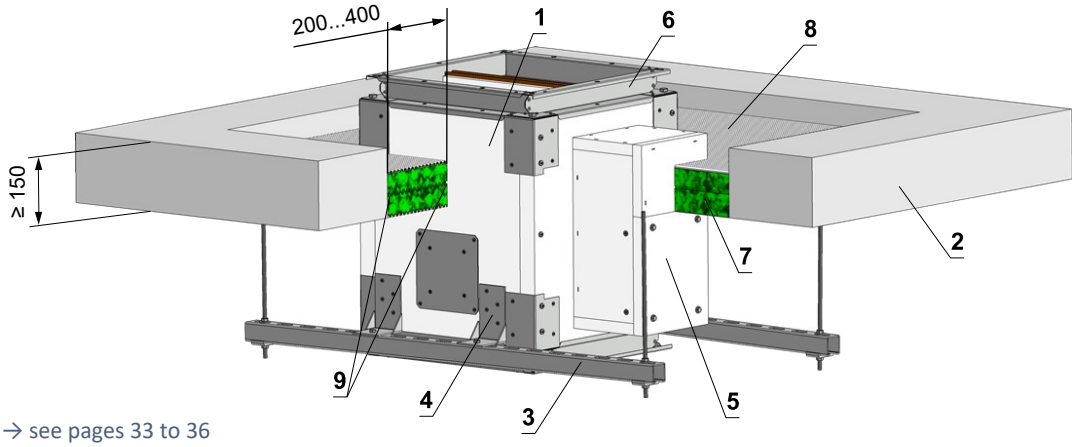

1 SEDM
2 Solid ceiling construction
3 Profile with threaded rod → see pages 33 to 36
4 L-holker → see page 37
5 Actuator cover - must be removable after installation of the damper
6 Flange
Ablative Coated Batt System HILTI
7 Mineral wool board - min. density 140 kg/m³ (HILTI CFS-CT B 1S 140/50...)
8 Fire stop coating - th. 1 mm (HILTI CFS-CT...) - coating is overcoated on the support construction and on the damper casing/duct.
9 Fire-resistant mastic - (HILTI CFS-S ACR...) fill the gap from both sides of the fire separation construction and around the perimeter of penetration and damper casing.

In solid ceiling construction - Ablative Coated Batt - actuator above ceiling

EI 120 S

- For connection of following duct → see pages 42 to 44
- Examples of anchors to the fire dividing construction → see pages 39 to 41
- Number of L-holders and their placement, acc. to AxB dimension → see page 37

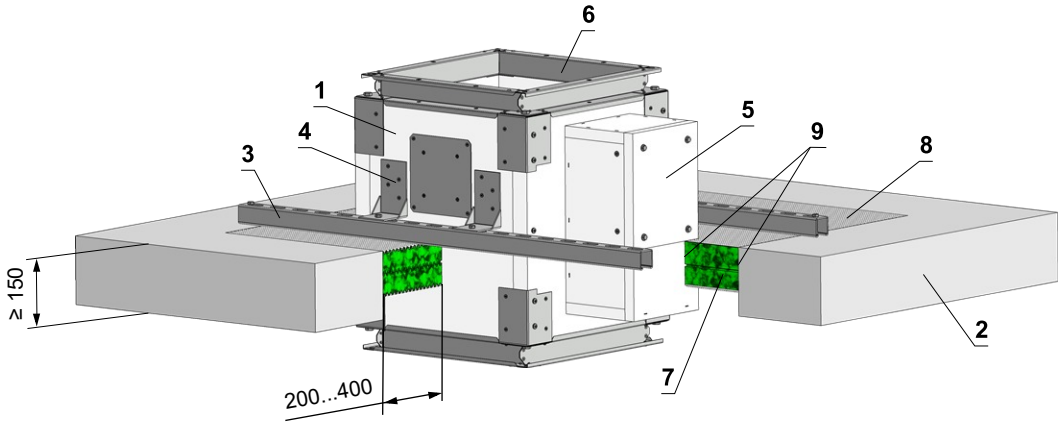

1 SEDM
2 Solid ceiling construction
3 Fixing profile HILTI MQ-41 (or MQ-41/3 or equivalent) → see page 36
4 L-holker → see page 37
5 Actuator cover - must be removable after installation of the damper
6 Flange
Ablative Coated Batt System HILTI
7 Mineral wool board - min. density 140 kg/m³ (HILTI CFS-CT B 1S 140/50...)
8 Fire stop coating - th. 1 mm (HILTI CFS-CT...) - coating is overcoated on the support construction and on the damper casing/duct.
9 Fire-resistant mastic - (HILTI CFS-S ACR...) fill the gap from both sides of the fire separation construction and around the perimeter of penetration and damper casing.

Installation in battery

2 dampers side by side - solid wall - Ablative Coated Batt **EI 120 S**

- Each damper must be suitably supported in each corner, front and rear with temporary supports, whilst being Installed and fire stopped, final supporters must be installed back to studs work or steel work as required.

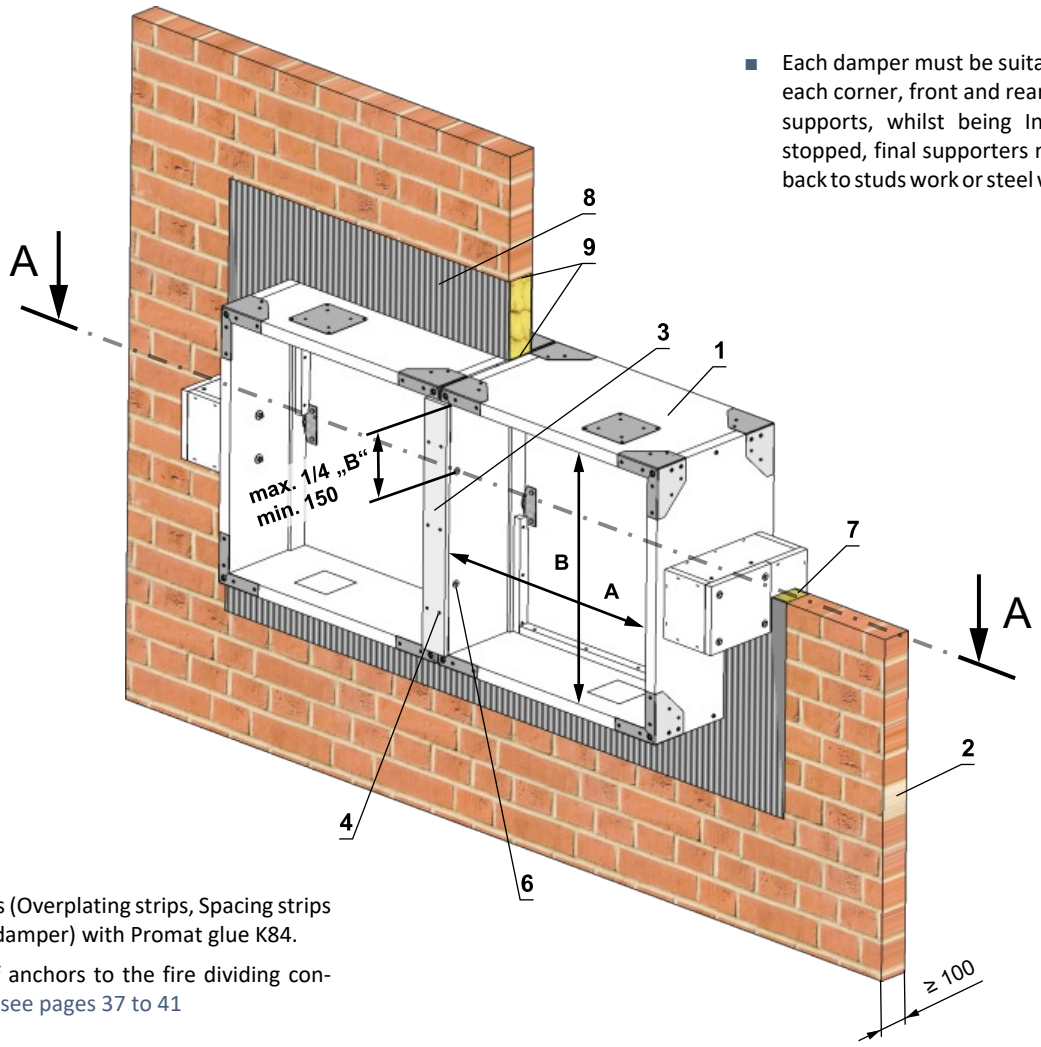

- Seal all joints (Overplating strips, Spacing strips with SEDM damper) with Promat glue K84.
- Examples of anchors to the fire dividing construction → see pages 37 to 41

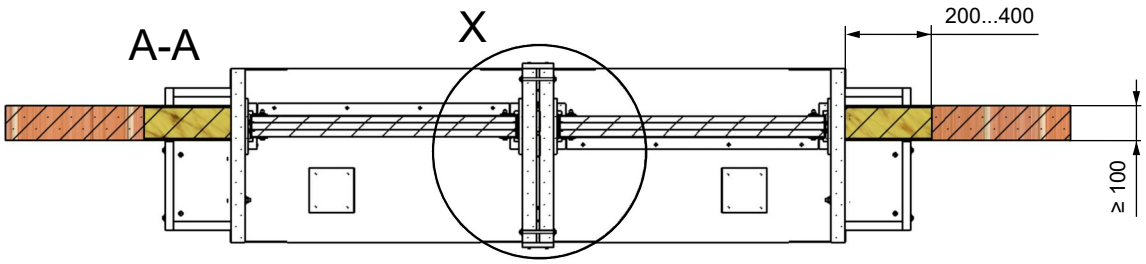

* **RESPECT JOINT POSITION !**
Bolts and nuts shall not prevent free rotation on the blades.

** When installing a flange, overplating strip is not installed.

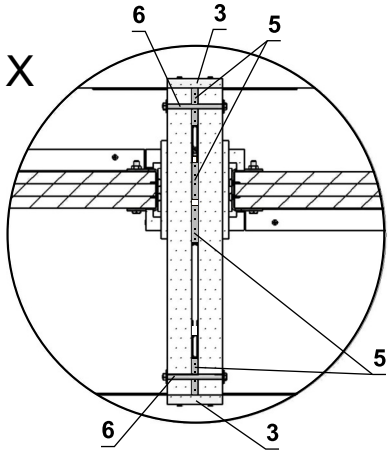

1 SEDM
2 Solid wall construction
3 Overplating strip (e.g. Supalux-S, th. 15 mm)**
4 Screw UNI 4x40 mm (span 200-250 mm)
5 Spacing strip (e.g. Supalux-S, th. 12 mm, width 40-50 mm)
6 M8 bolt assembly on damper side „B“ (bolt M8x105 mm, 2x large washer M8, nut M8), distance from edge see fig. *
Ablative Coated Batt System HILTI
7 Mineral wool board - min. density 140 kg/m³ (HILTI CFS-CT B 1S 140/50...)
8 Fire stop coating - th. 1 mm (HILTI CFS-CT...) - coating is overcoated on the support construction and on the damper casing/duct.
9 Fire-resistant mastic - (HILTI CFS-S ACR...) fill the gap from both sides of the fire separation construction and around the perimeter of penetration and damper casing.

Connecting straps, spacer straps, screws, screw connections and Promat glue K84 are not included in the delivery !

2 dampers side by side - gypsum wall - Ablative Coated Batt

EI 120 S

- Each damper must be suitably supported in each corner, front and rear with temporary supports, whilst being Installed and fire stopped, final supporters must be installed back to studs work or steel work as required.

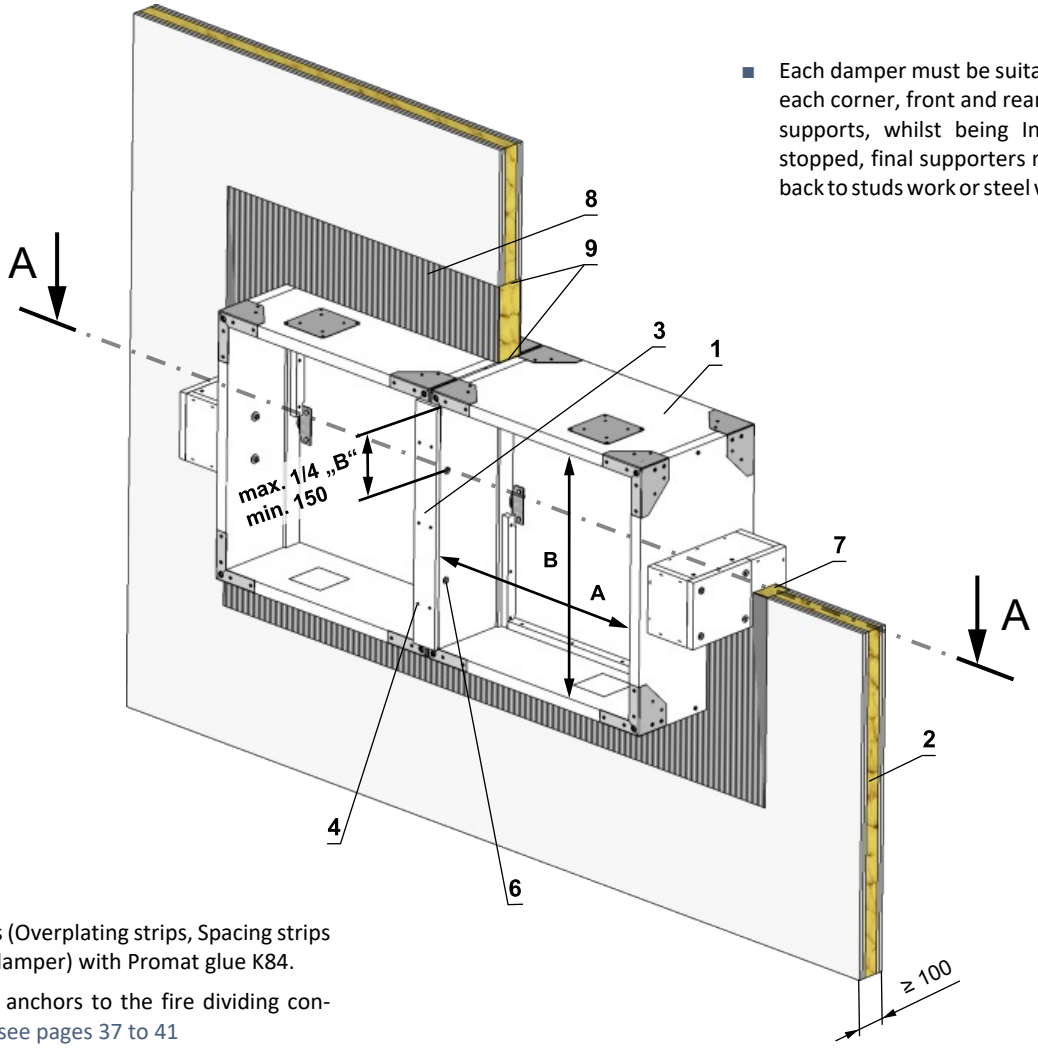

- Seal all joints (Overplating strips, Spacing strips with SEDM damper) with Promat glue K84.
- Examples of anchors to the fire dividing construction → see pages 37 to 41

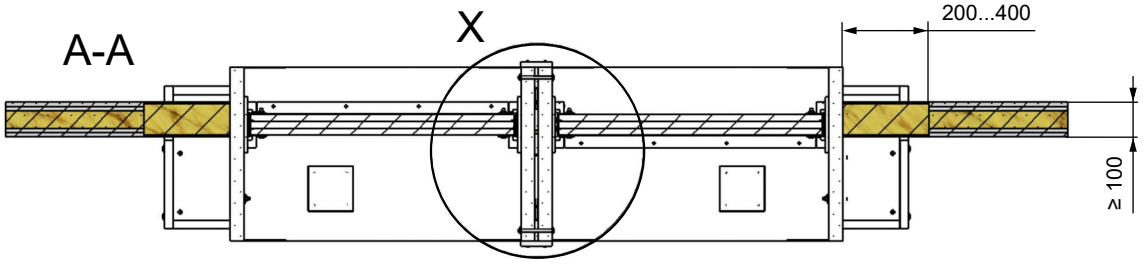

* **RESPECT JOINT POSITION !**
Bolts and nuts shall not prevent free rotation on the blades.

** When installing a flange, overplating strip is not installed.

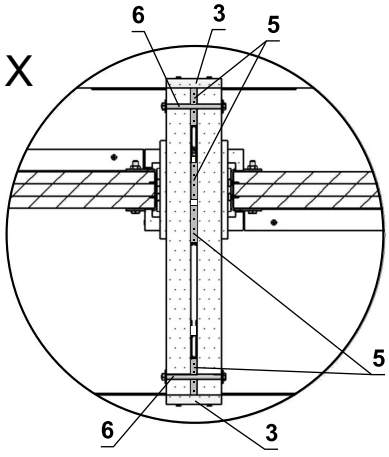

1 SEDM
2 Gypsum wall construction
3 Overplating strip (e.g. Supalux-S, th. 15 mm)**
4 Screw UNI 4x40 mm (span 200-250 mm)
5 Spacing strip (e.g. Supalux-S, th. 12 mm, width 40-50 mm)
6 M8 bolt assembly on damper side „B“ (bolt M8x105 mm, 2x large washer M8, nut M8), distance from edge see fig. *
Ablative Coated Batt System HILTI
7 Mineral wool board - min. density 140 kg/m³ (HILTI CFS-CT B 1S 140/50...)
8 Fire stop coating - th. 1 mm (HILTI CFS-CT...) - coating is overcoated on the support construction and on the damper casing/duct.
9 Fire-resistant mastic - (HILTI CFS-S ACR...) fill the gap from both sides of the fire separation construction and around the perimeter of penetration and damper casing.

Connecting straps, spacer straps, screws, screw connections and Promat glue K84 are not included in the delivery !

2 dampers on top of each other - solid wall - Ablative Coated Batt **EI 120 S**

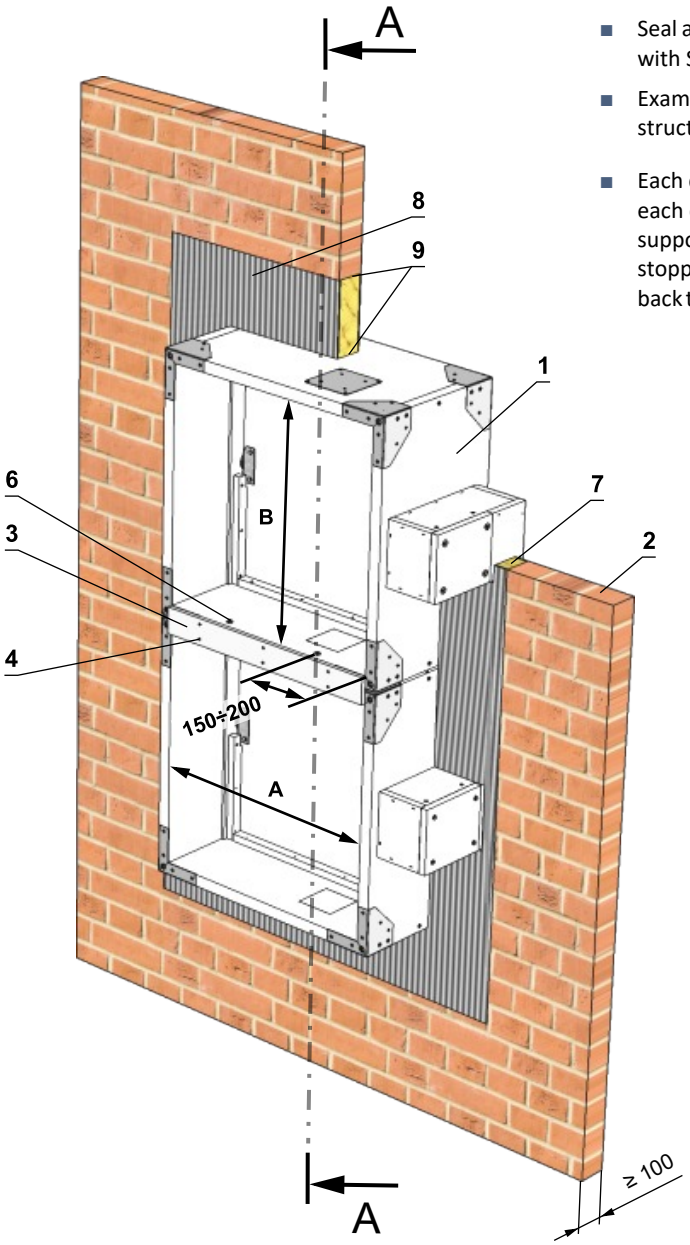

- Seal all joints (Overplating strips, Spacing strips with SEDM damper) with Promat glue K84.
- Examples of anchors to the fire dividing construction → see pages 37 to 41
- Each damper must be suitably supported in each corner, front and rear with temporary supports, whilst being Installed and fire stopped, final supporters must be installed back to studs work or steel work as required.

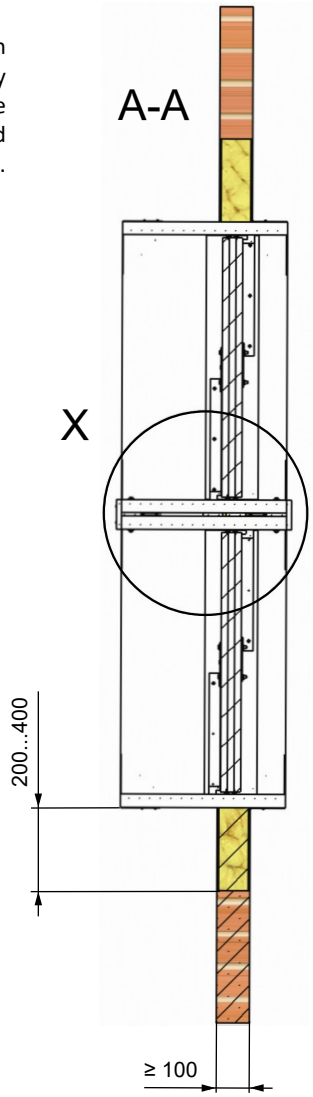

* When installing a flange, overplating strip is not installed.

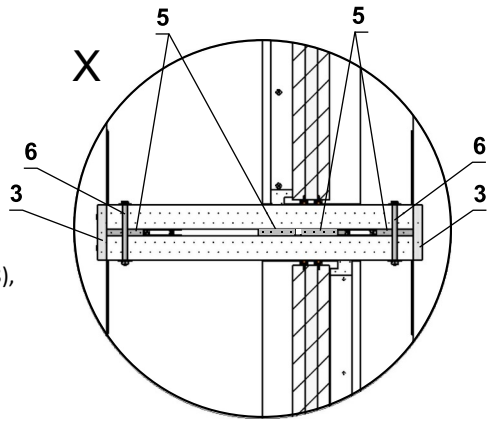

1 SEDM
2 Solid wall construction
3 Overplating strip (e.g. Supalux-S, th. 15 mm)*
4 Screw UNI 4x40 mm (span 200-250 mm)
5 Spacing strip (e.g. Supalux-S, th. 12 mm, width 40-50 mm)
6 M8 bolt assembly on damper side „A“ (bolt M8x105 mm, 2x large washer M8, nut M8), distance from edge see fig., span max. 400 mm
Ablative Coated Batt System HILTI
7 Mineral wool board - min. density 140 kg/m³ (HILTI CFS-CT B 1S 140/50...)
8 Fire stop coating - th. 1 mm (HILTI CFS-CT...) - coating is overcoated on the support construction and on the damper casing/duct.
9 Fire-resistant mastic - (HILTI CFS-S ACR...) fill the gap from both sides of the fire separation construction and around the perimeter of penetration and damper casing.

Connecting straps, spacer straps, screws, screw connections and Promat glue K84 are not included in the delivery !

4 dampers - gypsum wall - Ablative Coated Batt

EI 120 S

- Seal all joints (Overplating strips, Spacing strips with SEDM damper) with Promat glue K84.
- Examples of anchors to the fire dividing construction → see pages 37 to 41
- Each damper must be suitably supported in each corner, front and rear with temporary supports, whilst being Installed and fire stopped, final supporters must be installed back to studs work or steel work as required.

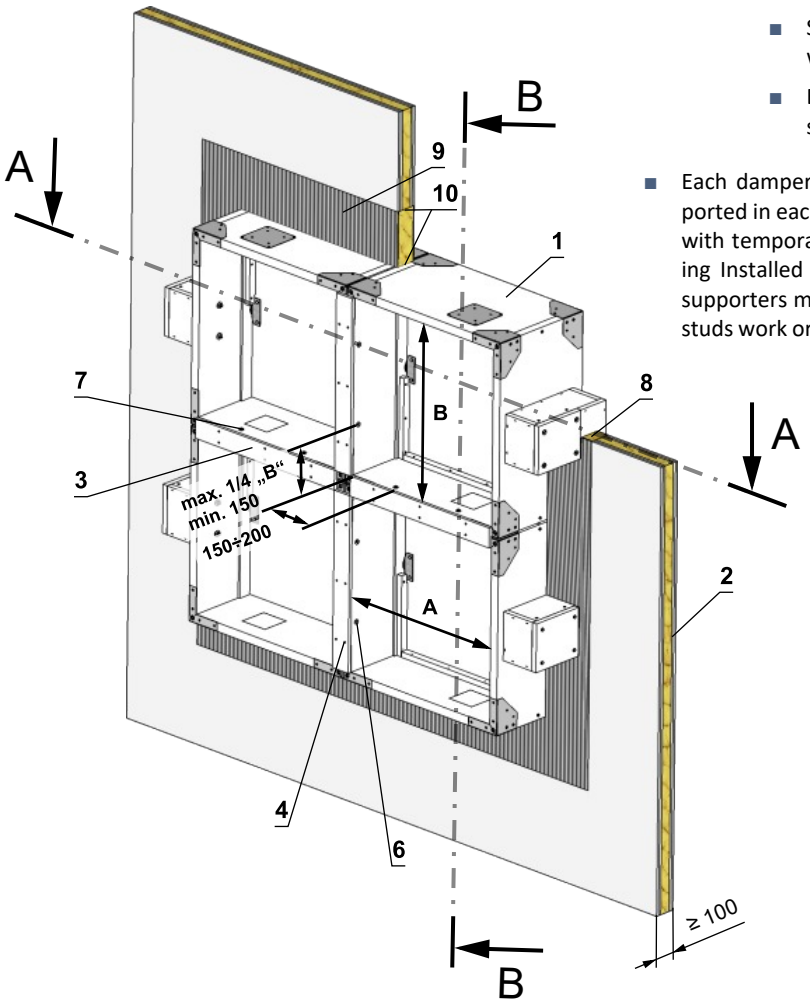

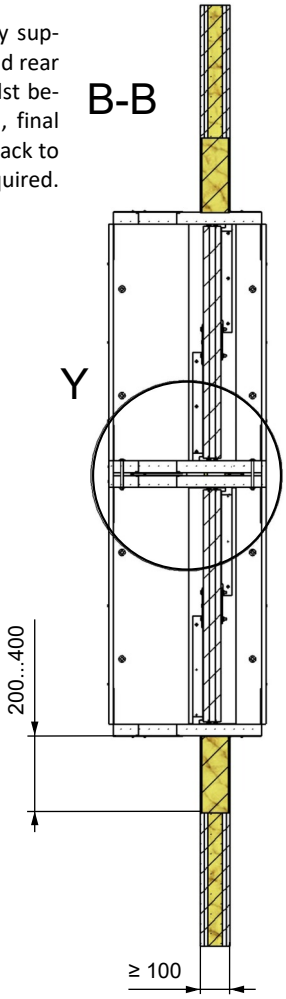

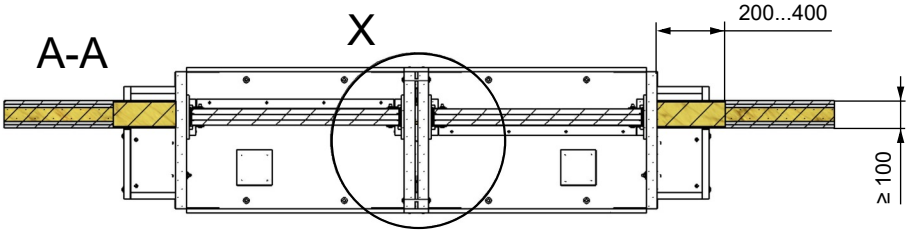

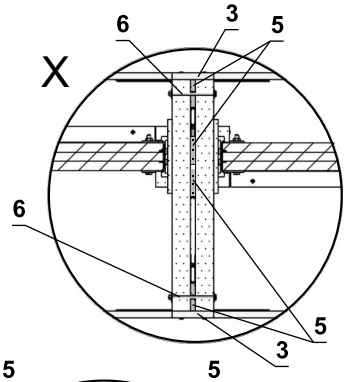

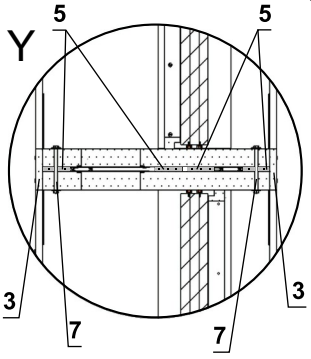

* **RESPECT JOINT POSITION !**
Bolts and nuts shall not prevent free rotation on the blades.

** When installing a flange, overplating strip is not installed.

1 SEDM
2 Gypsum wall construction
3 Overplating strip (e.g. Supalux-S, th. 15 mm)**
4 Screw UNI 4x40 mm (span 200-250 mm)
5 Spacing strip (e.g. Supalux-S, th. 12 mm, width 40-50 mm)
6 M8 bolt assembly on damper side „B“ (bolt M8x105 mm, 2x large washer M8, nut M8), distance from edge see fig. *
7 M8 bolt assembly on damper side „A“ (bolt M8x105 mm, 2x large washer M8, nut M8), distance from edge see fig., span max. 400 mm
Ablative Coated Batt System HILTI
8 Mineral wool board - min. density 140 kg/m³ (HILTI CFS-CT B 1S 140/50...)
9 Fire stop coating - th. 1 mm (HILTI CFS-CT...) - coating is overcoated on the support construction and on the damper casing/duct.
10 Fire-resistant mastic - (HILTI CFS-S ACR...) fill the gap from both sides of the fire separation construction and around the perimeter of penetration and damper casing.

Connecting straps, spacer straps, screws, screw connections and Promat glue K84 are not included in the delivery !

Installation into/onto vertical or horizontal smoke extraction duct

Installation of the damper into/onto vertical steel smoke extraction duct

EI 120 S

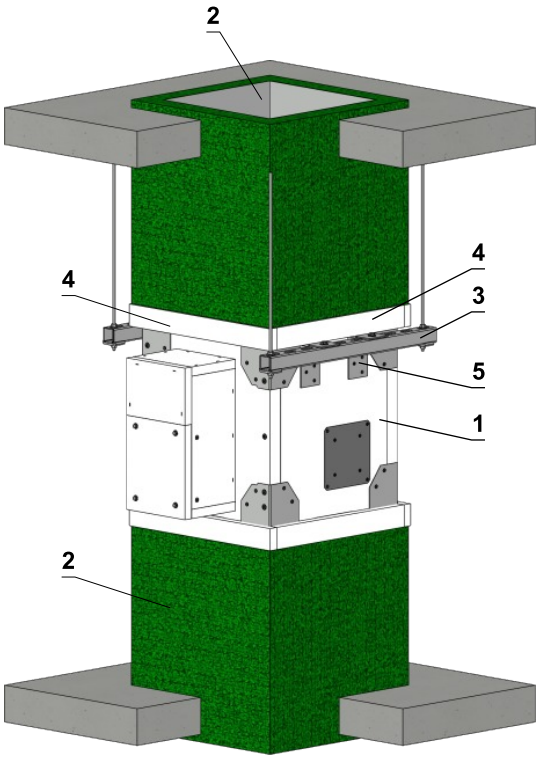

- Brackets must be mounted on sides, location and symmetry is not a specific requirement but is preferential.
- The dampers and duct must be suspended separately.
- Duct from BS EN 12101-7 in Steel (insulated or spray coated)
- Number of L-holders and their placement, acc. to AxB dimension, → see page 37
- Examples of anchors to the fire dividing construction → see pages 39 to 41
- Example of connection to duct → see pages 43 to 44

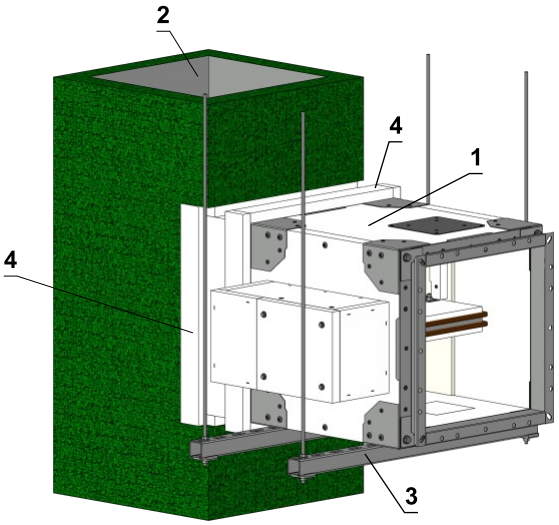

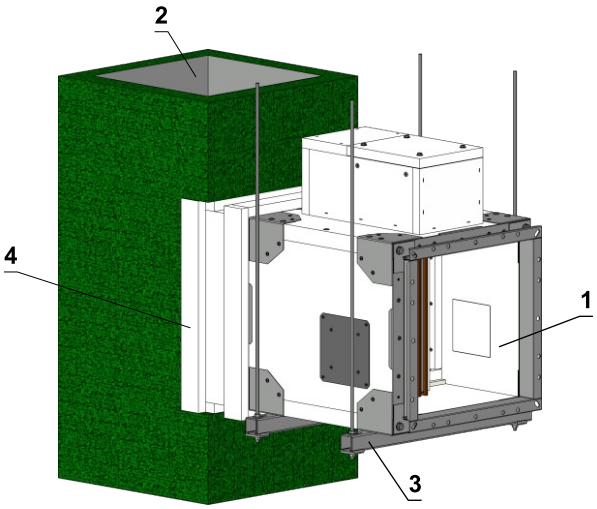

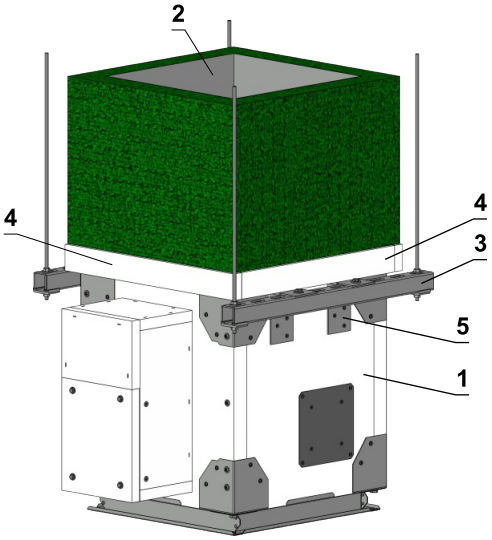

1 SEDM
2 Smoke extraction duct
3 Fixing profile with threaded rod → see page 36
4 Connection´s insulation
5 L-holder → see pages 37 to 41

Installation of the damper into/onto horizontal steel smoke extraction duct **EI 120 S**

- Brackets must be mounted on sides, location and symmetry is not a specific requirement but is preferential.
- The dampers and duct must be suspended separately.
- Duct from BS EN 12101-7 in Steel (insulated or spray coated)
- Number of L-holders and their placement, acc. to AxB dimension, → see page 37
- Examples of anchors to the fire dividing construction → see pages 39 to 41
- Example of connection to duct → see pages 43 to 44

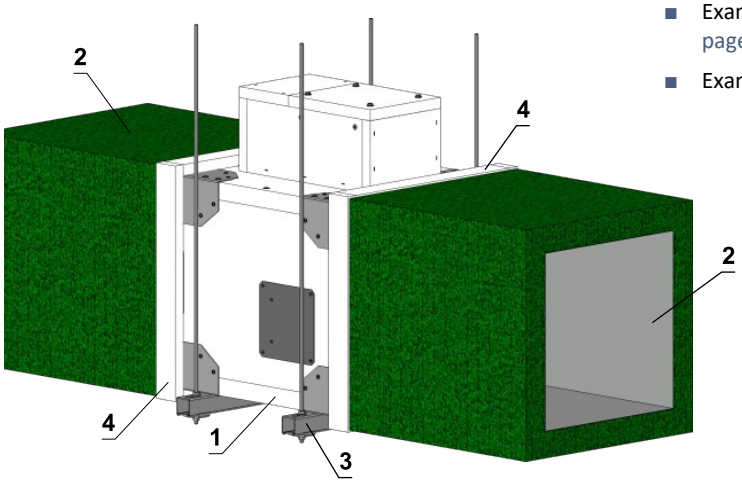

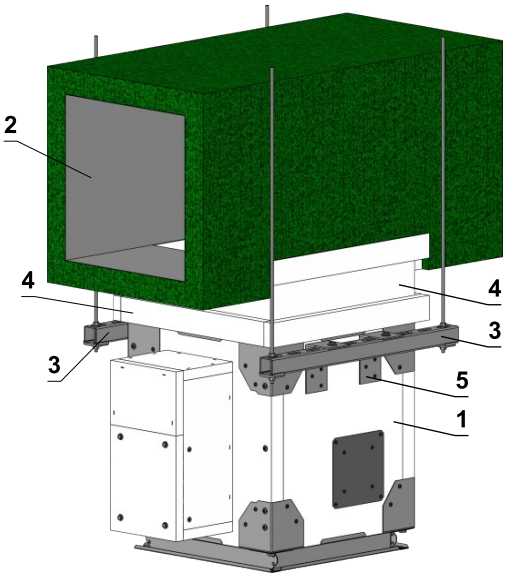

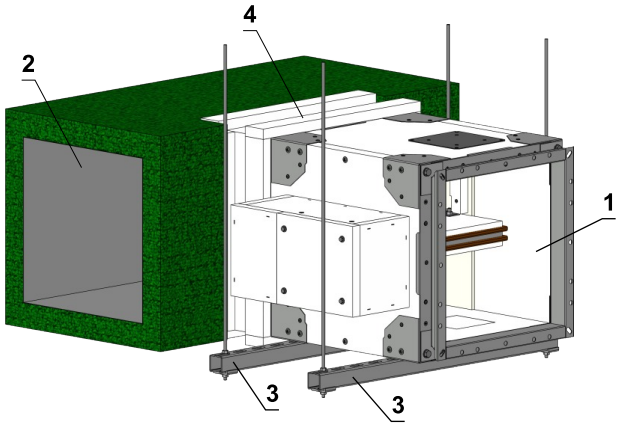

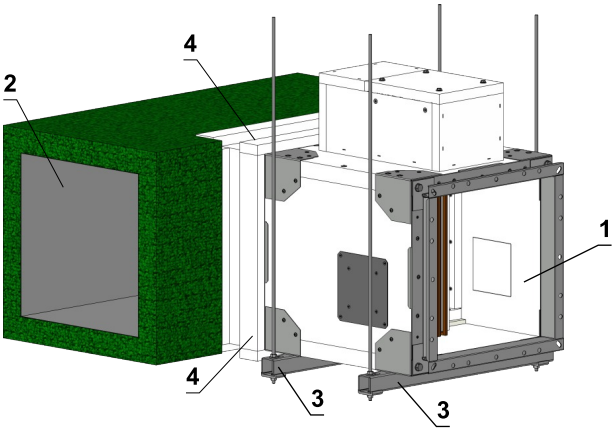

1 SEDM
2 Smoke extraction duct
3 Fixing profile with threaded rod → see page 36
4 Connection´s insulation
5 L-holder → see pages 37 to 41

V. SUSPENSION SYSTEMS

Mounting to the ceiling wall

- The dampers must be suspended using threaded rods and mounting profiles. Their dimensioning depend on the weight of the damper.
- The dampers and the duct must be suspended separately.
- Following air-conditioning duct must be suspended or supported so that all load transfer from the following duct to the damper flanges is absolutely excluded. Adjacent duct must be suspended or supported, as required by the duct suppliers.

Examples of anchoring to the ceiling construction
Follow the instructions of fixing specialist or installation company

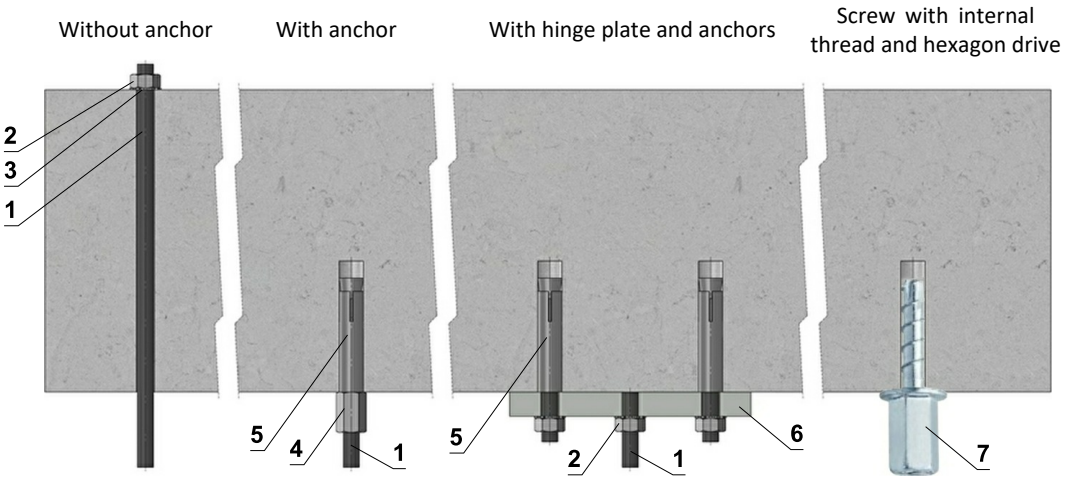

Hinge plates

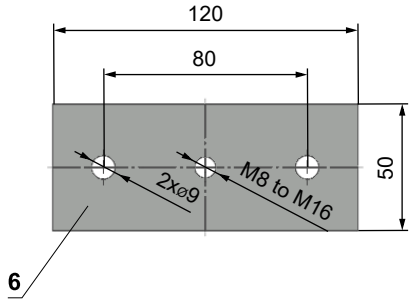

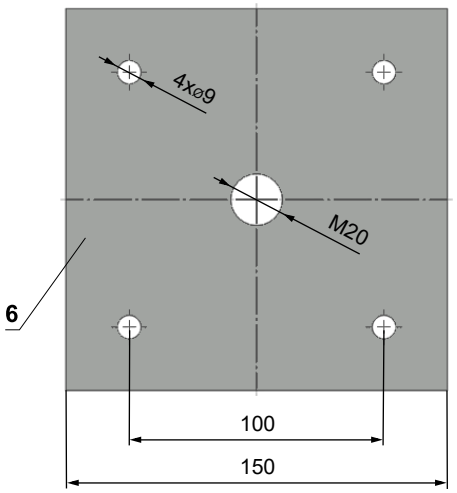

- If in doubt, always consult an anchor specialist engineer such as Halfen or Hilti.

1 Threaded rod M8 - M20
2 Nut M8 - M20
3 Washer for M8 - M20
4 Coupling Nut M8 - M20
5 Anchor
6 Hinge plate - min. thickness 10 mm
7 Concrete screw tested for fire resistance R30-R90, max. Tension up to 0.75 KN (length 35 mm)

Load capacities of threaded rods at the required fire resistance 60 min. < t ≤ 120 min.

Size	As [mm²]	Weight [kg]	
		for 1 rod	for 2 rods
M8	36,6	22	44
M10	58	35	70
M12	84,3	52	104
M16	157	96	192
M18	192	117	234
M20	245	150	300

Example of placing of mounting profiles HILTI

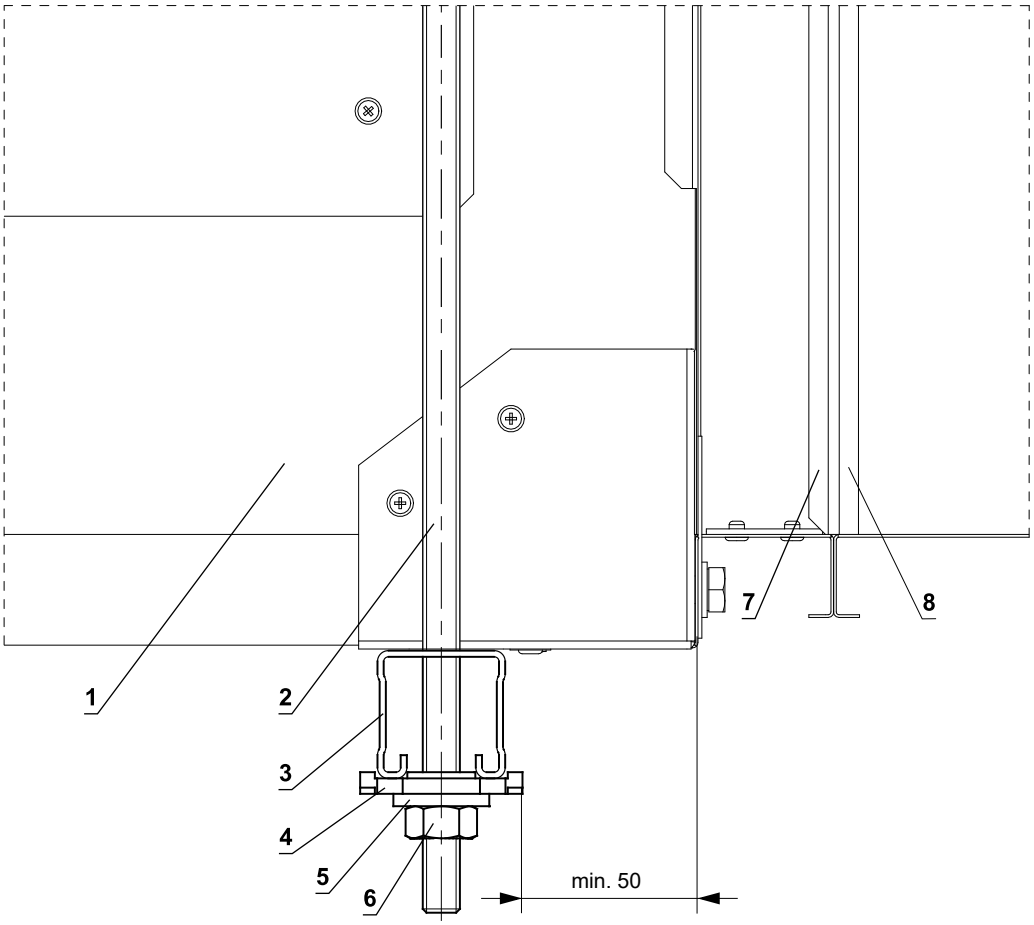

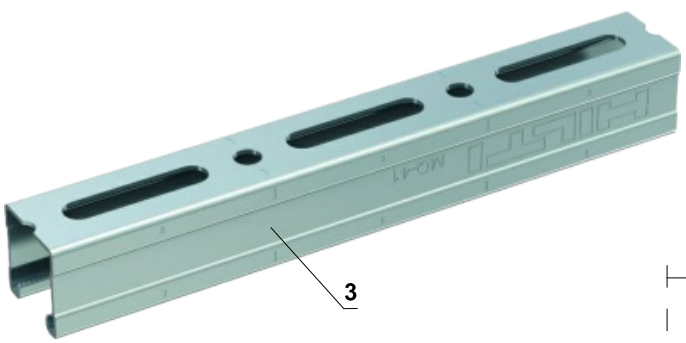

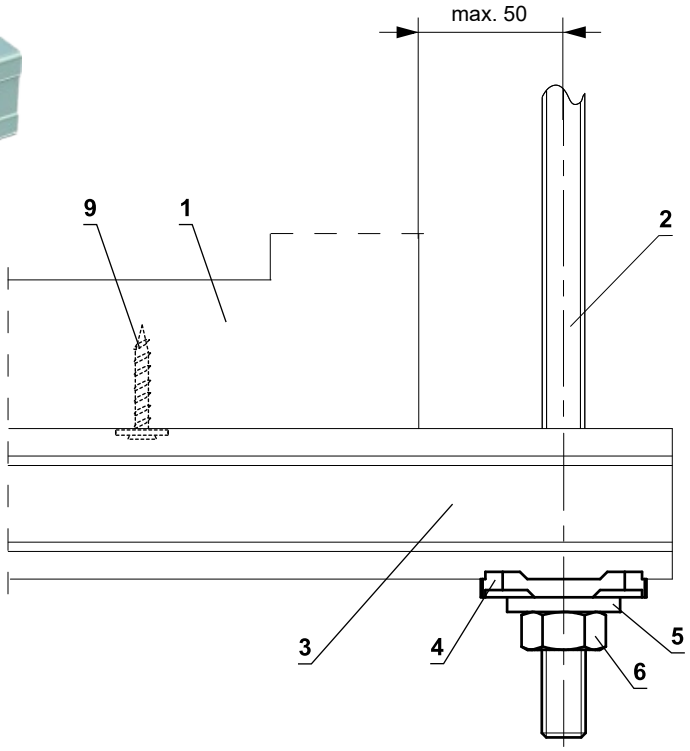

1 SEDM
2 Threaded rod M8 - M12
3 Support HILTI MQ-41 or MQ-41/3
4 Bored plate HILTI MQZ-L
5 Washer for M8 - M12
6 Nut M8 - M12
7 Flange of SEDM
8 Flange of duct
9 Self-tapping screw 5x30 mm and 1 pcs large washer M5 (for additional fixing, prevents the damper from sliding off the support - not necessary use)

Fixing SEDM according to size, with L-holder - tested fixing on wall / ceiling

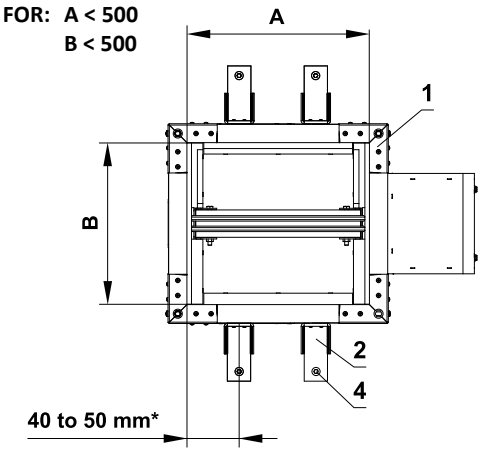

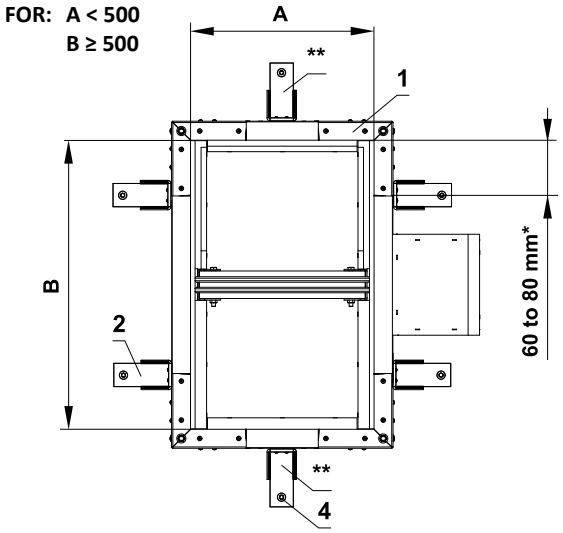

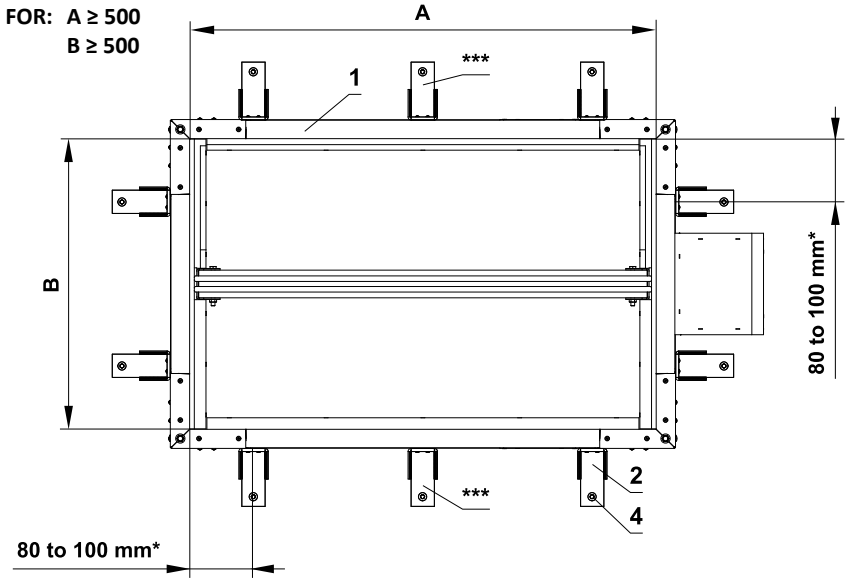

* From inner edge of the damper to the center of the holder, on both sides / opposite sides (mirrored)

** 1 holder to CENTER damper part "A" and on opposite sides (mirrored)

*** In case of A ≥ 1000, add holders to the center of the "A" side.

L-holder for connecting damper on the wall / ceiling (optional accessories MANDIK, a.s.)

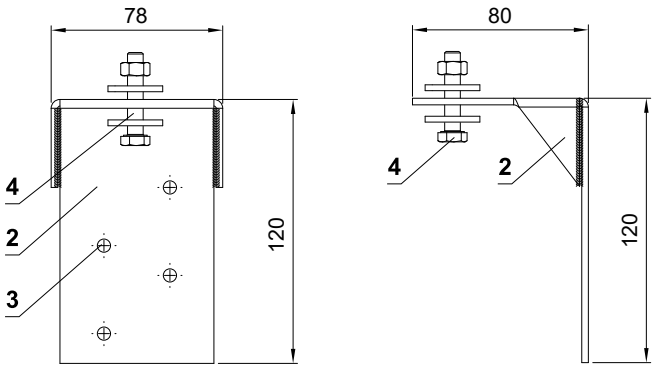

1 SEDM
2 L-holder - optional accessories from MANDIK, a.s.
3 Holes for screw UNI min. 5x30 mm for fastening L-holder to damper body
4 M8 bolt assembly (bolt min. M8x60 mm, 2 pcs large washer M8, nut M8) or Anchor to concrete, → see page 35

- Details and examples placing of L-holder → see pages 33 to 34 and 38

Examples placing of L-holder and Cantilever arm

Indicative only -final design is the responsibility of the specialist installation contractor.

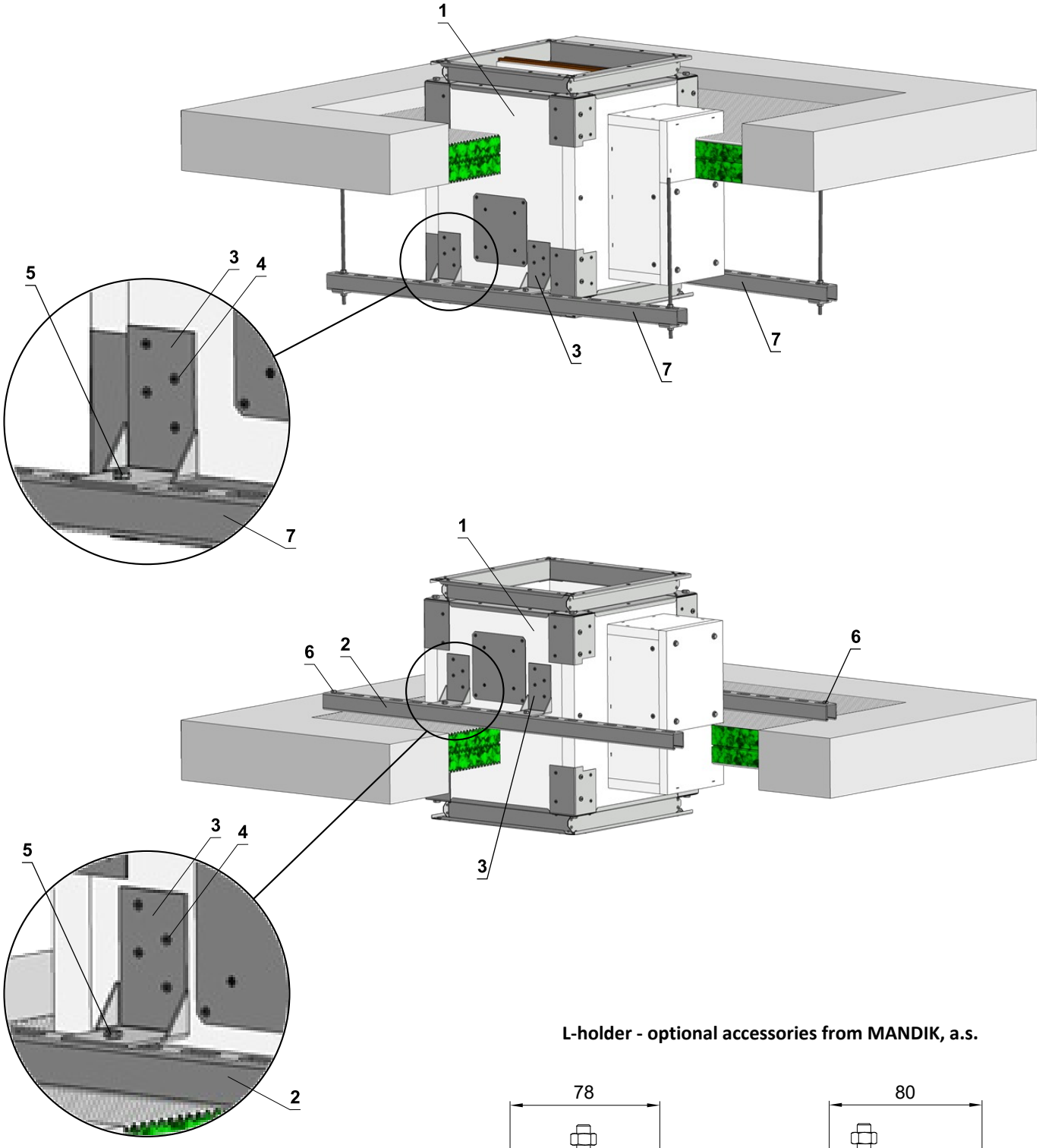

L-holder - optional accessories from MANDIK, a.s.

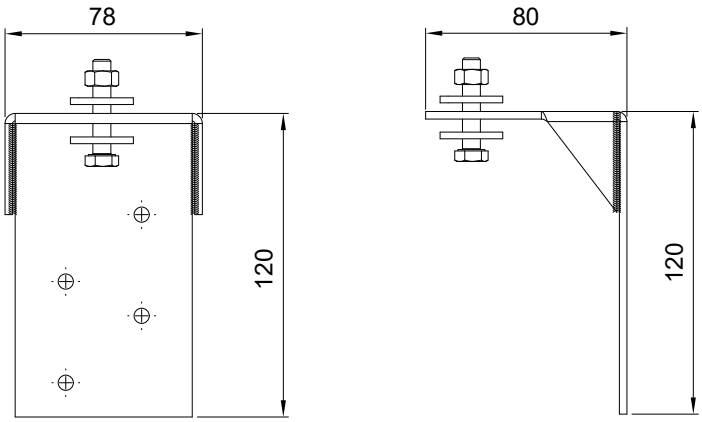

1 SEDM
2 Support HILTI MQ-41 (or MQ-41/3 or equivalent)
3 L-holder - optional accessories from MANDIK, a.s.
4 Screw UNI 5x30 mm
5 M8 bolt assembly (bolt min. M8x60 mm, 2 pcs large washer M8, nut M8) or equivalent
6 Anchor → see page 35
7 Fixing profile with threaded rod → see page 36

Fixing SEDM according to size - tested fixing to solid / gypsum or ceiling wall

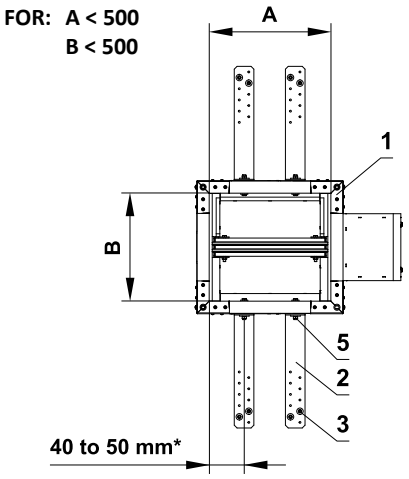

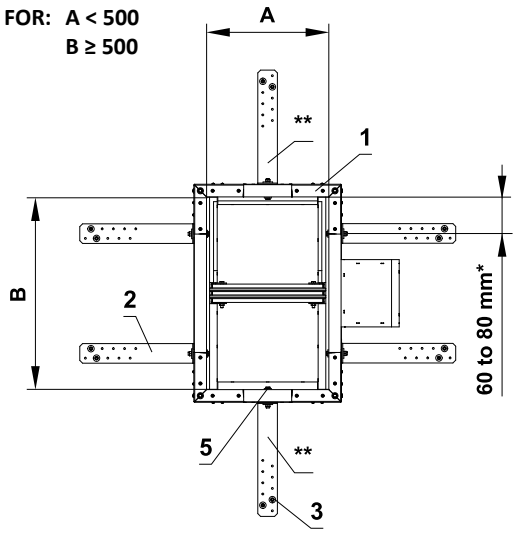

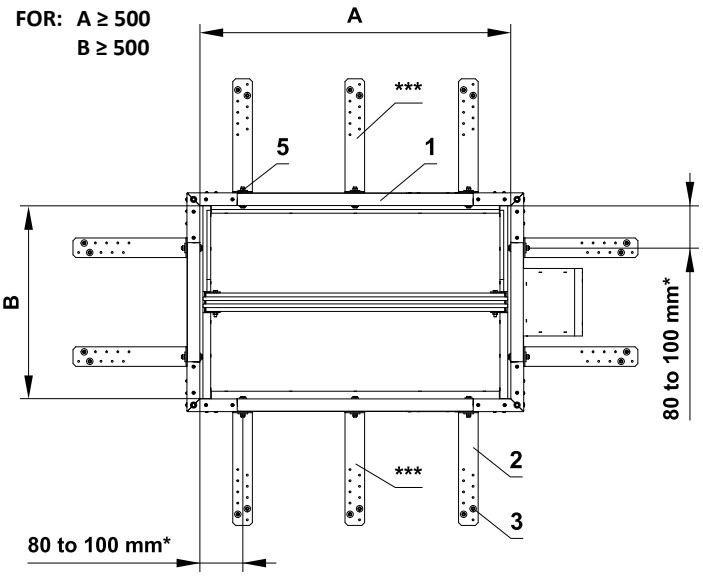

* From inner edge of the damper to the center of the holder, on both sides / opposite sides (mirrored)

** 1 holder to CENTER damper part "A" and on opposite sides (mirrored)

*** In case of A ≥ 1000, add holders to the center of the "A" side.

Fixing element/steel holder for connecting damper to the wall (optional accessories MANDIK, a.s.)

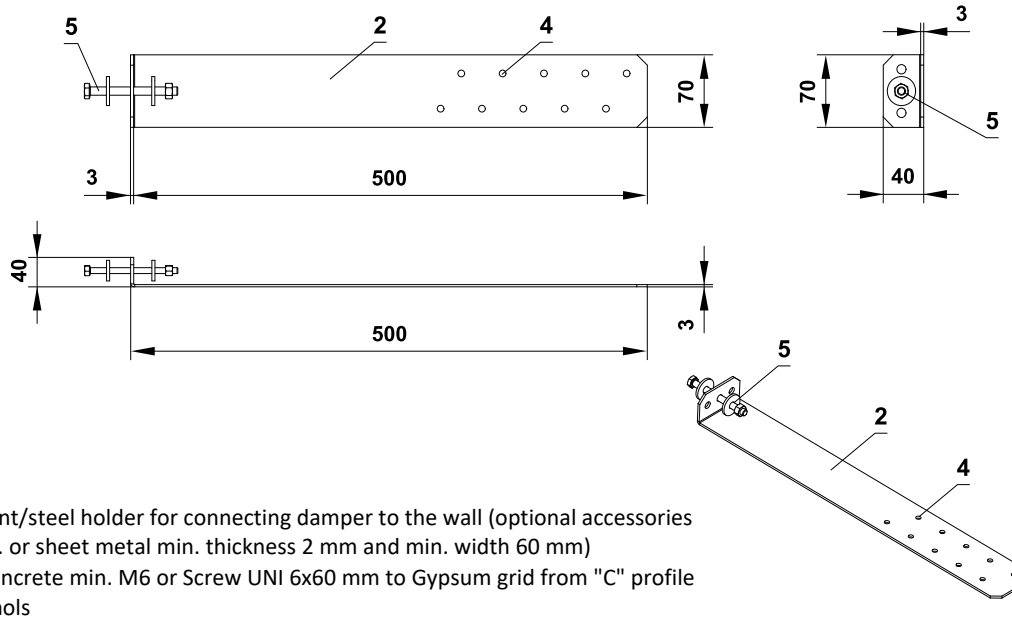

1 SEDM
2 Fixing element/steel holder for connecting damper to the wall (optional accessories MANDIK, a.s. or sheet metal min. thickness 2 mm and min. width 60 mm)
3 Anchor to concrete min. M6 or Screw UNI 6x60 mm to Gypsum grid from "C" profile
4 Installation hols
5 M8 bolt assembly (bolt M8x55 mm, 2 pcs large washer M8, nut M8)

■ Details → see pages 40 to 41

Fixing SEDM to the solid (ceiling) wall construction with Ablative Coated Batt system

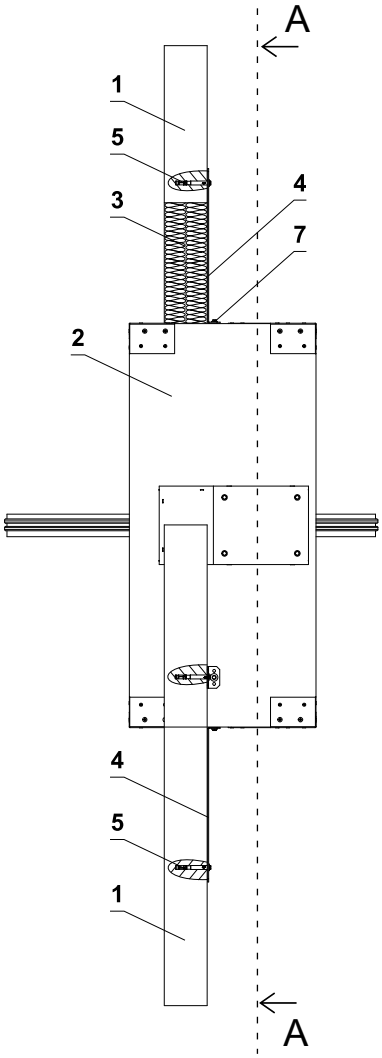

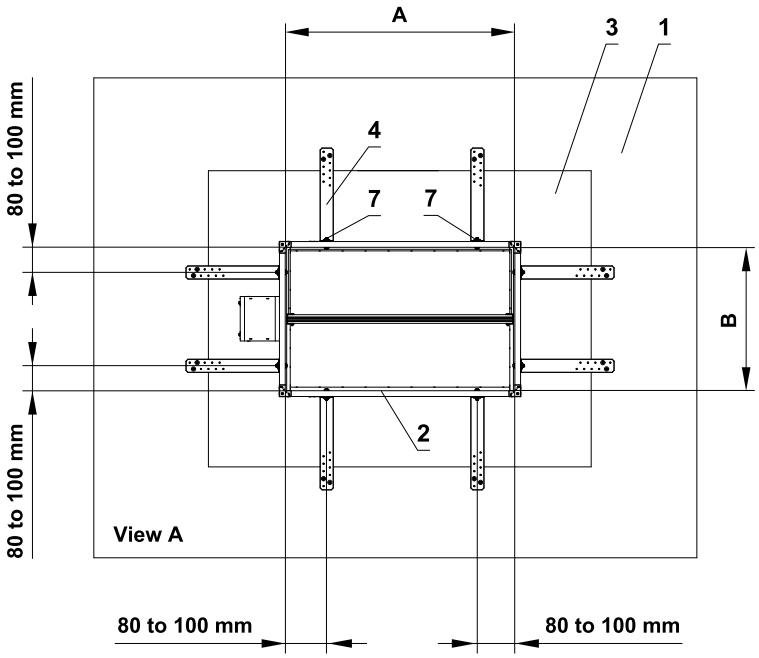

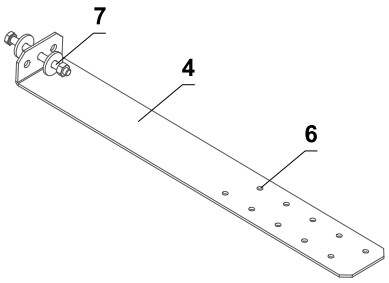

* **ATTENTION TO THE LOCATION OF THE JOINT !**
Screws and nuts must not impede the free rotation of Blades.

1 Solid wall construction
2 SEDM
3 Ablative Coated Batt
4 Fixing element/steel holder for connecting damper to the wall (optional accessories MANDIK, a.s. or sheet metal min. thickness 2 mm and min. width 60 mm)
5 Anchor to concrete min. M6
6 Installation hols
7 M8 bolt assembly (bolt M8x55 mm, 2 pcs large washer M8, nut M8) *

- The method of mounting must meet the minimum requirements for attachment in accordance with national regulations.

Fixing SEDM to the gypsum wall construction with Ablative Coated Batt system

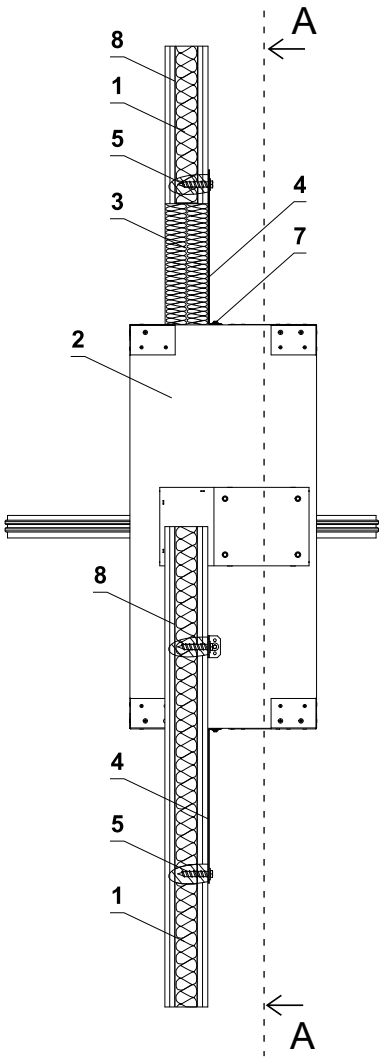

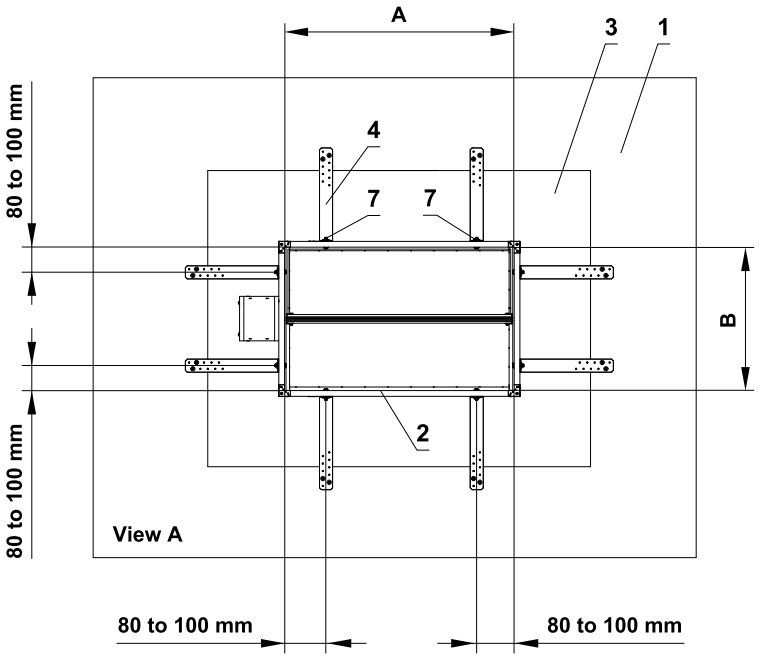

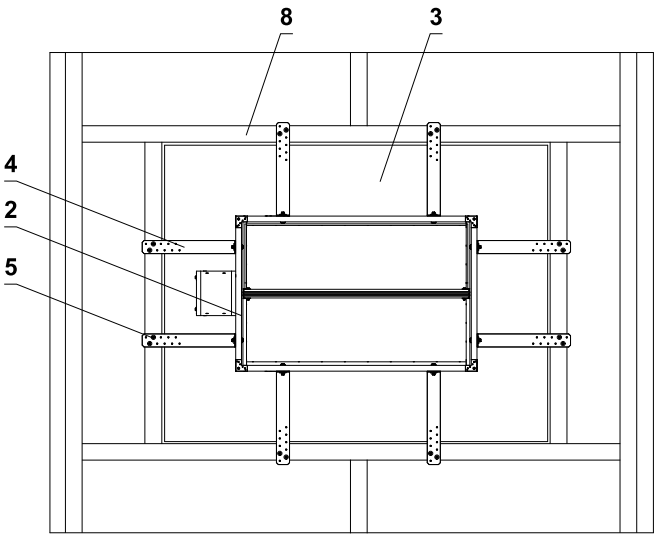

View A - grid from "C" profile

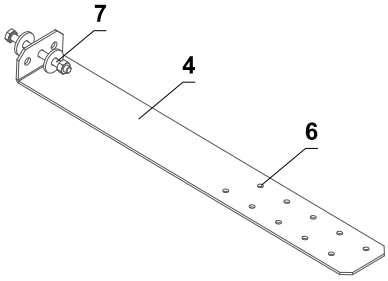

* **ATTENTION TO THE LOCATION OF THE JOINT !**
Screws and nuts must not impede the free rotation of Blades.

1 Gypsum wall construction
2 SEDM
3 Ablative Coated Batt
4 Fixing element/steel holder for connecting damper to the wall (optional accessories MANDIK, a.s. or sheet metal min. thickness 2 mm and min. width 60 mm)
5 Screw UNI 6x60 mm
6 Installation hols
7 M8 bolt assembly (bolt M8x55 mm, 2 pcs large washer M8, nut M8) *
8 Gypsum grid from "C" profile

- The method of mounting must meet the minimum requirements for attachment in accordance with national regulations.

Example of duct connection

Flange connection

Connection to smoke extract duct acc. to BS EN 1366-8 (MULTI) / to BS EN 1366-9 (SINGLE)

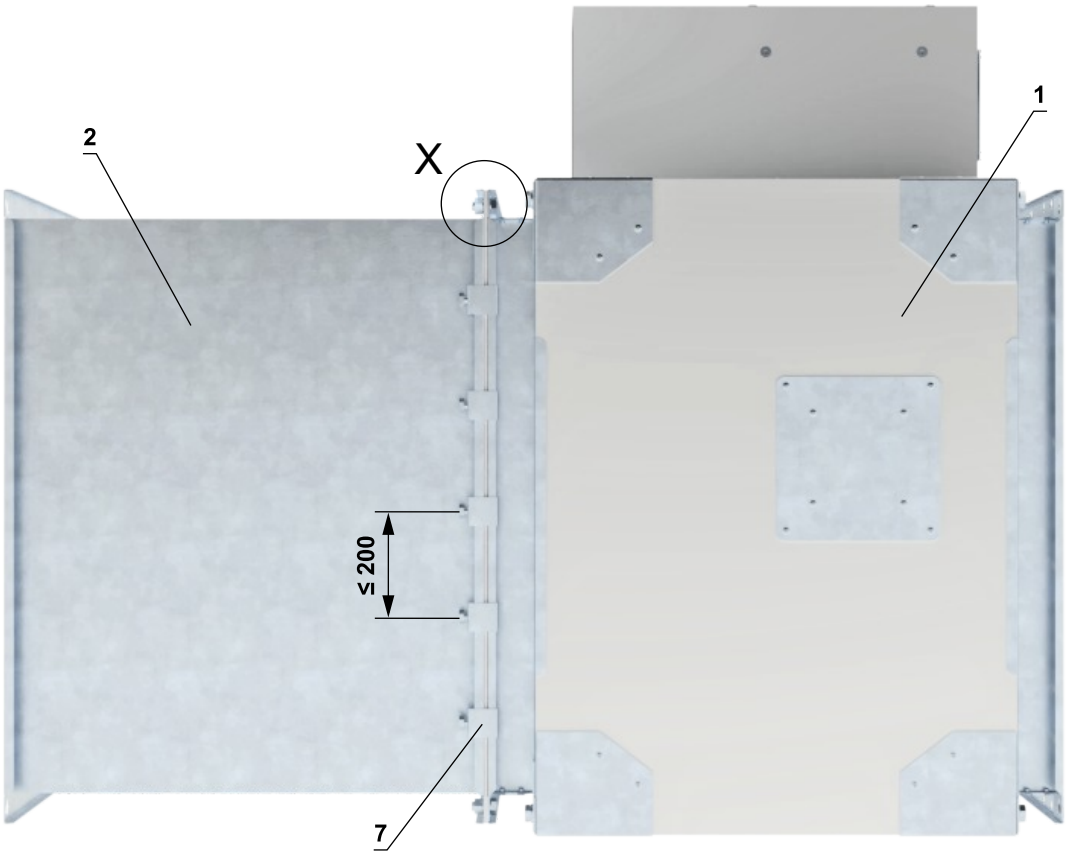

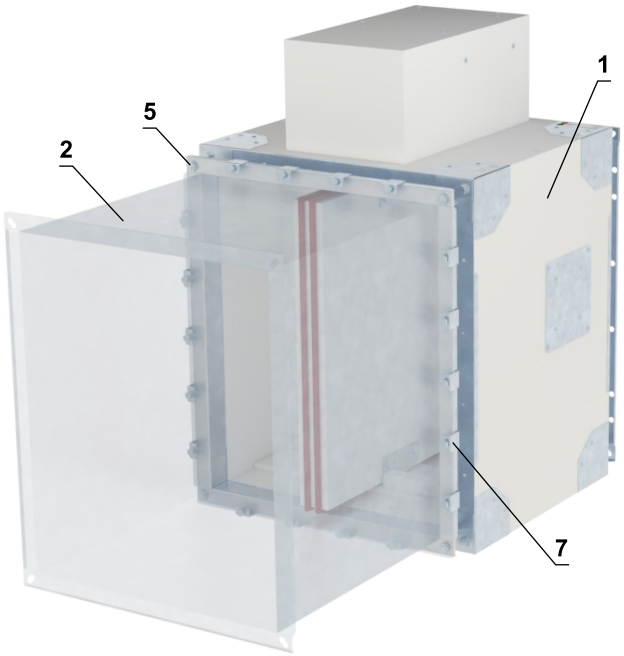

Electrically conductive connection

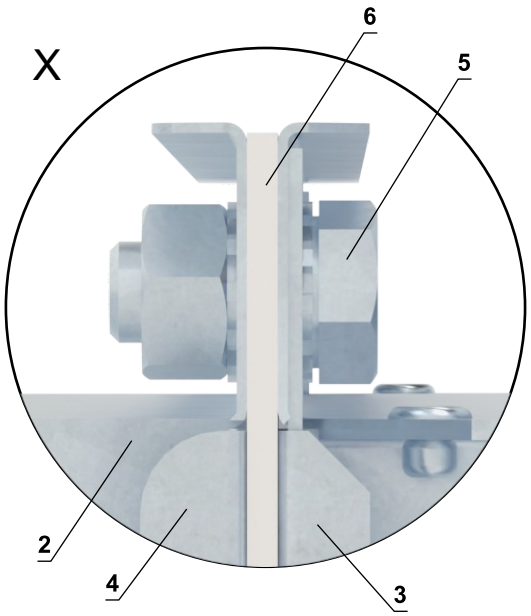

1 SEDM
2 Connecting air duct MULTI
3 Flange of SEDM
4 Flange of duct
5 M8 bolt assembly (bolt M8x20 mm, 2 pcs lock washer M8, nut M8) *
6 Ceramic selfadhesive sealing tape - arround the duct circumference (type according to duct manufacturer instructions)
7 M8 C-clamps - maximum spacing of C-clamps 200 mm (type according to duct manufacturer instructions)

* min. one connection must be electrically conductive

Example of connection SEDM damper in steel duct MULTI with insulation ROCKWOOL FIREPRO DuctRock Slab

Connect the joints of stone wool plates with ROCKWOOL FIREPRO Glue, secure with screws and welding pins at max. spacings of 250 mm. Board joints must be covered using ROCKWOOL black aluminium foil tape. Follow duct supplier's instructions and insulation.

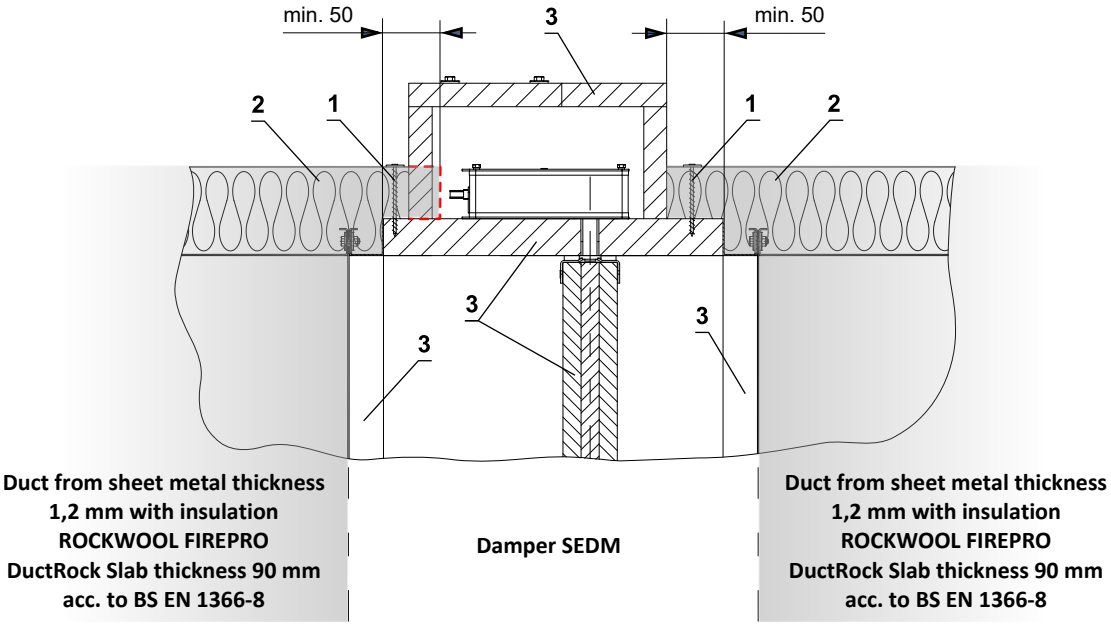

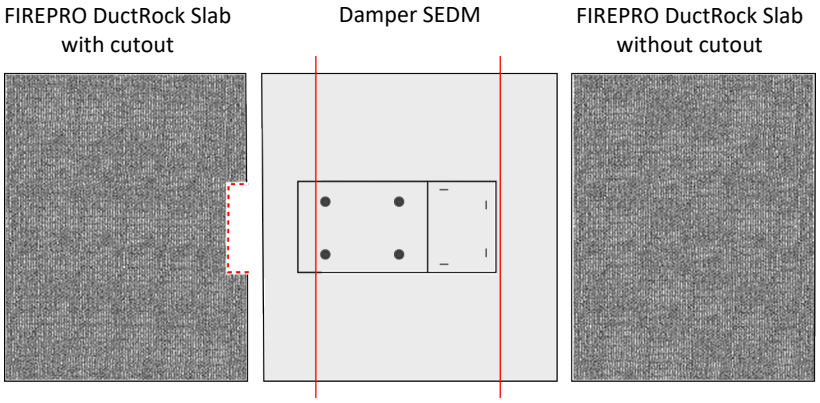

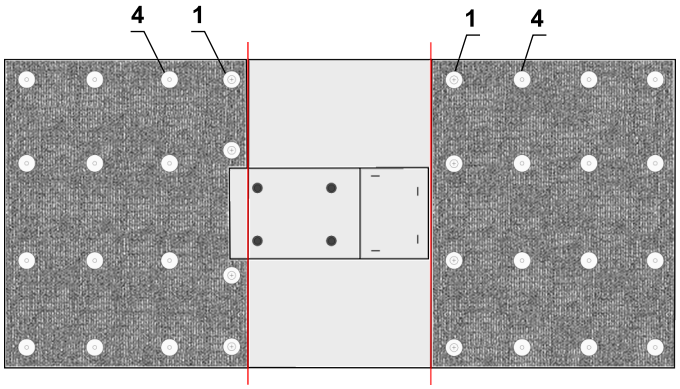

1 Universal screw min. Ø5 mm, length 70 mm, max. spacing 250 mm
2 ROCKWOOL FIREPRO DuctRock Slab th. 90 mm acc. to BS EN 1366-8
3 Part of SEDM
4 Welding pins at max. spacings of 250 mm

Insulation cut-out area around the actuator cover

Example installed SEDM damper in fire separating construction and connection to steel duct MULTI

Connect the joints of stone wool plates with ROCKWOOL FIREPRO Glue, secure with screws and welding pins at max. spacings of 250 mm. Board joints must be covered using ROCKWOOL black aluminium foil tape. Follow duct supplier's instructions and insulation.

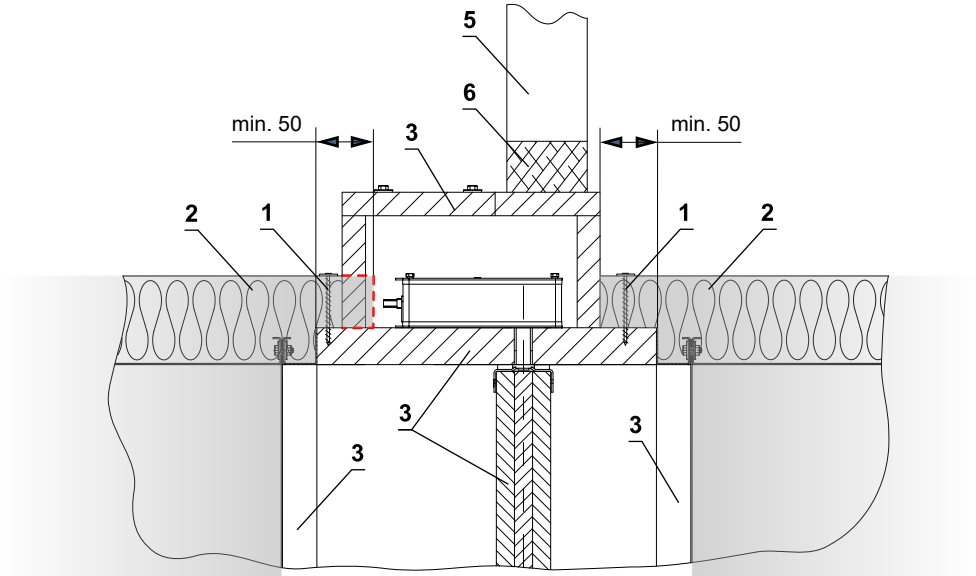

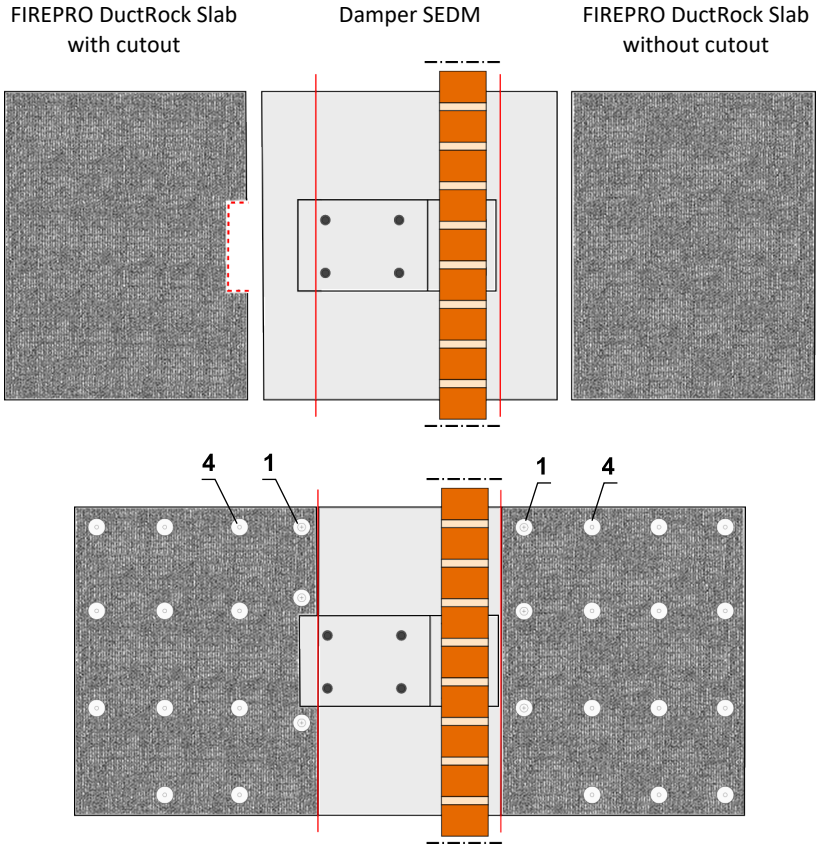

1 Universal screw min. Ø5 mm, length 70 mm, max. spacing 250 mm
2 ROCKWOOL FIREPRO DuctRock Slab th. 90 mm acc. to BS EN 1366-8
3 Part of SEDM
4 Welding pins at max. spacings of 250 mm
5 Wall*
6 Penetration

* Same rules apply to mounting and connection in the ceiling construction

Insulation cut-out area around the actuator cover

VI. ACCESSORIES

Cover grille KMM

- The grilles type KMM (TPM 002/96) can be used to close smoke control dampers.
- During grilles installation blade overlaps has to be respected → see page 11.
- These grilles are available in all sizes of the smoke control dampers.
- For KMM grille ensure blade overlaps do not strike KMM- spacer duct may be required - not included in delivery.
- Free area value for KMM is 78%.

SEDM with cover grille without flange

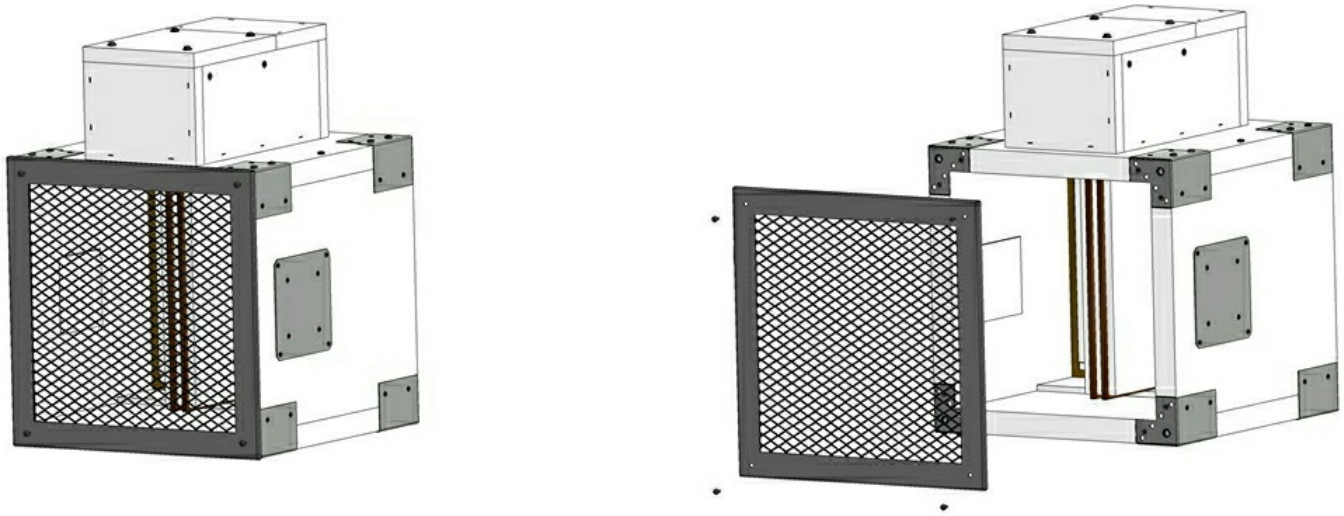

SEDM with cover grille and with flange

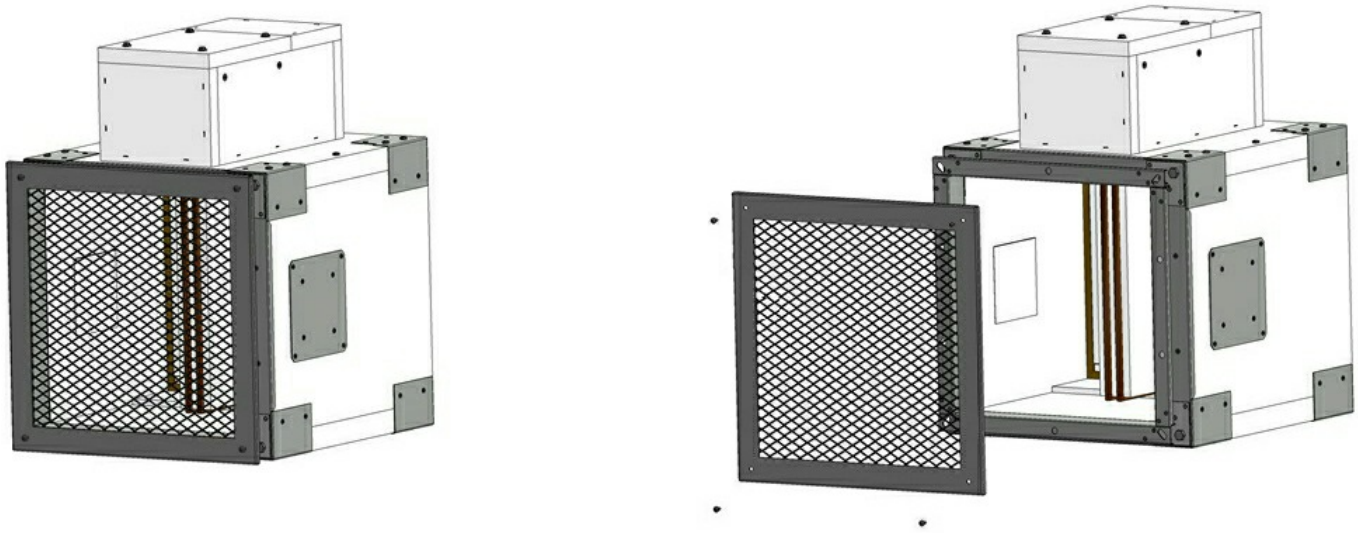

VII. TECHNICAL DATA

Pressure loss

Pressure loss calculation

$$\Delta p = \xi \cdot \rho \cdot \frac{w^2}{2}$$

Δp	[Pa]	pressure loss
w	[m/s]	air flow speed in nominal damper section
ρ	[kg/m³]	air density
ξ	[-]	coefficient of local pressure loss for the nominal damper section → see page 47

Determination of pressure loss by using diagram ρ = 1,2 kg/m³

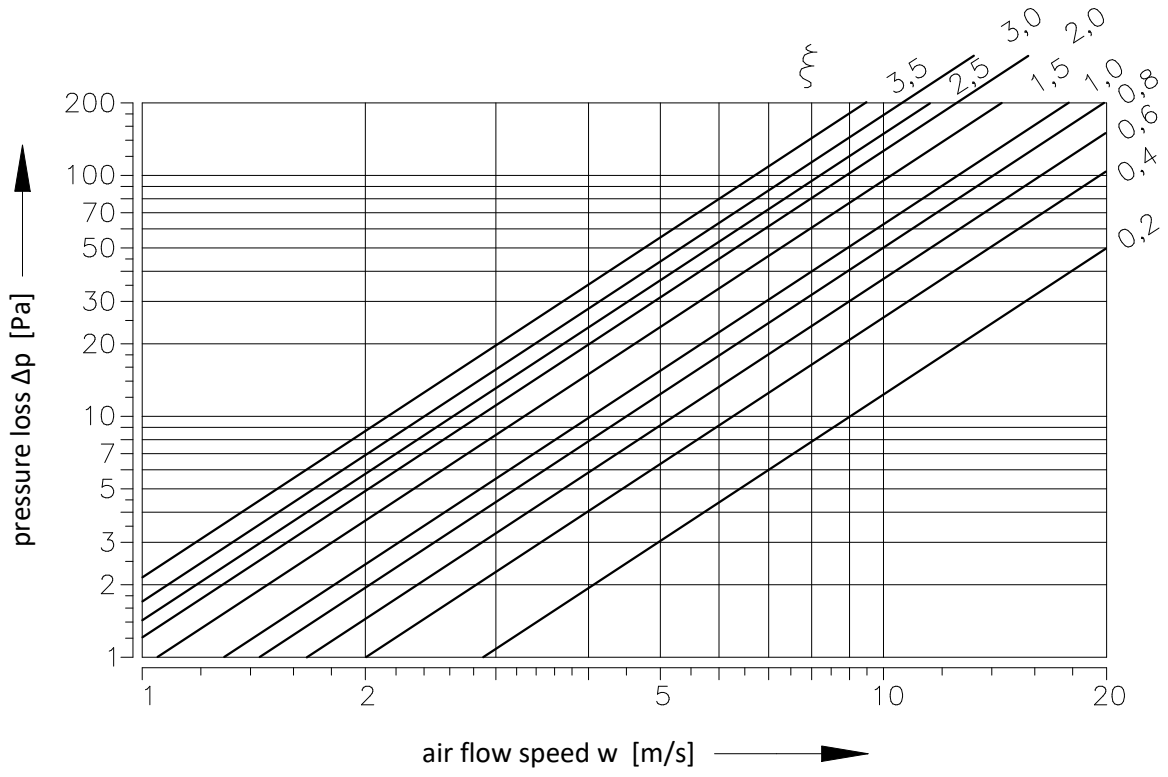

Coefficient of local pressure loss

						B					
A	**180**	**200**	**225**	**250**	**280**	**300**	**315**	**355**	**400**	**450**	**500**
180	3,1433	2,5092	2,0162	1,6711	1,4773	1,3192	1,1951	1,0336	0,9095	0,8126	0,7429
200	2,9529	2,3545	1,9584	1,5657	1,3991	1,2512	1,1186	0,9673	0,8500	0,7582	0,6919
225	2,7795	2,2032	1,8326	1,4909	1,3226	1,1594	1,0438	0,9231	0,8143	0,7157	0,6562
250	2,6401	2,1012	1,7204	1,3923	1,2172	1,0795	0,9911	0,8568	0,7514	0,6698	0,6120
280	2,5721	2,0417	1,6677	1,3413	1,1577	1,0506	0,9333	0,8313	0,7242	0,6375	0,5984
300	2,5075	1,9822	1,5725	1,2784	1,1373	1,0081	0,9078	0,8075	0,7055	0,6239	0,5627
315	2,4055	1,9108	1,5283	1,2376	1,0897	0,9843	0,8806	0,7752	0,6800	0,6052	0,5525
355	2,3103	1,8343	1,4552	1,2121	1,0676	0,9265	0,8602	0,7412	0,6511	0,5797	0,5287
400	2,2304	1,7697	1,3787	1,1679	1,0217	0,9044	0,8279	0,7140	0,6256	0,5576	0,5083
450	2,1607	1,7153	1,3413	1,1305	1,0013	0,8823	0,8007	0,6902	0,6052	0,5389	0,4913
500	2,1080	1,6711	1,3362	1,1016	0,9452	0,8483	0,7633	0,6715	0,5882	0,5236	0,4777
550	2,0723	1,6507	1,2971	1,0829	0,9231	0,8194	0,7514	0,6613	0,5797	0,5185	0,4726
560	2,0587	1,6320	1,2886	1,0744	0,9061	0,8211	0,7429	0,6545	0,5729	0,5100	0,4658
600	2,0247	1,6116	1,2801	1,0659	0,8959	0,8041	0,7327	0,6443	0,5627	0,5066	0,4590
630	2,0128	1,5946	1,2733	1,0489	0,8857	0,7871	0,7259	0,6392	0,5593	0,4981	0,4539
650	2,0043	1,5742	1,2546	1,0421	0,8687	0,7786	0,7225	0,6324	0,5559	0,4947	0,4505
700	1,9873	1,5674	1,2512	1,0319	0,8517	0,7701	0,7157	0,6290	0,5508	0,4913	0,4471
710	1,9720	1,5623	1,2274	1,0268	0,8534	0,7548	0,7089	0,6256	0,5474	0,4879	0,4437
750	1,9567	1,5419	1,2172	1,0183	0,8483	0,7497	0,6987	0,6188	0,5406	0,4845	0,4386
800	1,9380	1,5351	1,2087	1,0081	0,8432	0,7446	0,6953	0,6137	0,5372	0,4777	0,4352
900	1,9074	1,5096	1,2053	0,9911	0,8228	0,7259	0,6834	0,6035	0,5270	0,4692	0,4284
1000	1,8836	1,4909	1,2002	0,9792	0,7939	0,7106	0,6749	0,5950	0,5202	0,4641	0,4216
1100	1,8615	1,4739	1,1917	0,9673	0,7752	0,7004	0,6664	0,5865	0,5134	0,4573	0,4165
1250	1,8428	1,4569	1,1781	0,9554	0,7735	0,6987	0,6579	0,5814	0,5083	0,4522	0,4114
1400	1,8241	1,4433	1,1696	0,9469	0,7718	0,6970	0,6511	0,5746	0,5032	0,4471	0,4080
1500	1,8139	1,4348	1,1611	0,9418	0,7684	0,6936	0,6477	0,5712	0,4998	0,4454	0,4046
1600	1,8054	1,4280	1,1169	0,9367	0,7667	0,6902	0,6443	0,5678	0,4981	0,4420	0,4029

						B					
A	**550**	**560**	**600**	**630**	**650**	**700**	**710**	**750**	**800**	**900**	**1000**
180	0,6987	0,6800	0,6477	0,6273	0,5984	0,5933	0,5831	0,5627	0,5474	0,5168	0,4947
200	0,6545	0,6341	0,6052	0,5848	0,5627	0,5525	0,5440	0,5304	0,5100	0,4828	0,4607
225	0,6188	0,5916	0,5712	0,5559	0,5355	0,5287	0,5134	0,5032	0,4777	0,4556	0,4318
250	0,5882	0,5610	0,5372	0,5168	0,4998	0,4913	0,4862	0,4726	0,4488	0,4335	0,4063
280	0,5559	0,5304	0,5151	0,4947	0,4828	0,4794	0,4726	0,4471	0,4301	0,4216	0,3927
300	0,5321	0,5202	0,4947	0,4743	0,4675	0,4624	0,4573	0,4267	0,4182	0,4029	0,3808
315	0,5134	0,5049	0,4692	0,4658	0,4471	0,4386	0,4318	0,4097	0,4046	0,3825	0,3655
355	0,4896	0,4828	0,4556	0,4454	0,4318	0,4216	0,4131	0,3961	0,3876	0,3655	0,3485
400	0,4743	0,4641	0,4471	0,4284	0,4182	0,4097	0,3978	0,3842	0,3723	0,3519	0,3349
450	0,4556	0,4488	0,4352	0,4131	0,4046	0,3927	0,3842	0,3757	0,3587	0,3383	0,3230
500	0,4505	0,4369	0,4182	0,4012	0,3876	0,3791	0,3723	0,3587	0,3485	0,3298	0,3145
550	0,4437	0,4267	0,4148	0,3978	0,3808	0,3757	0,3655	0,3519	0,3451	0,3247	0,3111
560	0,4386	0,4250	0,4097	0,3910	0,3757	0,3723	0,3638	0,3451	0,3400	0,3213	0,3060
600	0,4369	0,4199	0,3978	0,3876	0,3672	0,3638	0,3587	0,3434	0,3366	0,3162	0,3026
630	0,4301	0,4148	0,3927	0,3825	0,3621	0,3570	0,3536	0,3417	0,3315	0,3128	0,2992
650	0,4267	0,4097	0,3927	0,3808	0,3604	0,3553	0,3502	0,3400	0,3298	0,3111	0,2975
700	0,4250	0,4080	0,3859	0,3791	0,3587	0,3536	0,3485	0,3383	0,3281	0,3077	0,2941
710	0,4216	0,4063	0,3808	0,3740	0,3570	0,3502	0,3468	0,3349	0,3247	0,3060	0,2924
750	0,4199	0,4029	0,3757	0,3706	0,3553	0,3468	0,3434	0,3315	0,3213	0,3026	0,2873
800	0,4182	0,3978	0,3757	0,3655	0,3536	0,3451	0,3400	0,3281	0,3179	0,2992	0,2856
900	0,4148	0,3910	0,3757	0,3604	0,3519	0,3417	0,3332	0,3179	0,3128	0,2941	0,2805
1000	0,4012	0,3859	0,3706	0,3553	0,3502	0,3349	0,3281	0,3145	0,3077	0,2907	0,2771
1100	0,3927	0,3808	0,3587	0,3502	0,3417	0,3298	0,3247	0,3094	0,3043	0,2856	0,2737
1250	0,3876	0,3757	0,3536	0,3451	0,3383	0,3281	0,3213	0,3077	0,2992	0,2822	0,2703
1400	0,3825	0,3723	0,3502	0,3417	0,3332	0,3264	0,3179	0,3043	0,2975	0,2805	0,2669
1500	0,3791	0,3706	0,3485	0,3400	0,3298	0,3247	0,3162	0,3026	0,2958	0,2788	0,2652
1600	0,3774	0,3672	0,3451	0,3383	0,3264	0,3230	0,3145	0,2992	0,2941	0,2771	0,2635

Noise data - level of acoustic output corrected with filter A

Air velocity 4 m/s
Level of acoustic output [dB]

	B																					
A	**180**	**200**	**225**	**250**	**280**	**300**	**315**	**355**	**400**	**450**	**500**	**550**	**560**	**600**	**630**	**650**	**700**	**710**	**750**	**800**	**900**	**1000**
180	56	49	48	46	44	42	41	41	40	40	40	40	40	40	40	40	40	38	38	37	38	38
200	52	48	45	44	41	41	41	41	40	40	39	39	39	38	38	38	37	37	37	36	37	37
225	50	47	45	40	40	40	41	40	39	39	39	38	38	36	36	37	37	36	36	36	36	36
250	49	45	44	42	40	40	40	39	38	38	37	37	37	37	37	37	37	37	37	36	36	36
280	47	45	40	40	40	39	38	37	37	37	37	37	37	36	36	36	36	36	36	36	35	35
300	47	44	40	40	39	39	39	37	36	37	37	37	37	35	35	35	35	35	36	36	36	35
315	47	44	40	40	39	39	37	37	37	36	36	36	36	36	36	36	36	35	35	35	34	34
355	46	43	40	39	39	37	37	36	36	36	36	35	35	35	35	35	35	35	33	34	35	35
400	47	42	40	39	37	37	36	36	36	35	35	35	35	35	35	35	34	34	34	34	33	33
450	45	42	40	39	37	37	37	36	35	35	35	35	35	35	35	35	35	35	34	34	34	34
500	45	40	39	38	37	36	36	36	35	35	35	34	34	33	33	34	34	34	33	33	33	33
550	44	40	40	38	37	37	36	36	35	35	34	34	34	34	34	33	33	33	33	33	33	33
560	44	40	40	38	37	37	36	35	35	35	34	34	34	34	34	34	33	33	33	33	33	33
600	44	40	38	36	36	36	36	36	35	35	35	35	35	33	33	33	33	32	32	32	32	32
630	44	40	38	37	36	36	36	35	35	35	34	34	34	34	34	34	33	33	33	33	32	32
650	44	40	38	37	36	36	36	35	35	35	34	34	34	34	34	34	33	33	33	33	33	33
700	43	39	38	38	36	36	36	37	35	36	34	34	34	34	34	33	33	33	33	33	33	33
710	43	39	38	38	36	36	36	37	35	36	34	34	34	34	34	33	33	33	33	33	33	33
750	43	40	38	37	36	35	35	34	34	34	34	34	33	33	33	33	33	33	33	33	33	33
800	43	40	37	37	36	36	35	34	34	34	34	33	33	33	33	33	33	33	33	33	33	33
900	43	40	37	36	36	36	35	34	34	34	34	33	33	33	33	33	33	33	33	33	33	33
1000	43	39	37	37	37	36	35	35	34	34	34	33	33	33	33	33	33	33	33	33	33	33
1100	42	39	37	37	37	35	35	34	34	34	33	33	33	33	33	33	33	33	32	32	32	32
1250	42	39	37	37	37	35	35	34	34	34	34	34	33	33	33	33	33	33	32	32	32	32
1400	42	39	37	37	37	35	35	34	34	34	33	33	33	33	33	33	33	33	32	32	32	31
1500	42	39	37	37	37	35	35	34	34	34	33	33	33	33	33	33	33	33	32	32	32	31
1600	42	39	37	37	37	35	35	34	34	34	33	33	33	33	33	33	33	33	32	32	32	31

Air velocity 5 m/s
Level of acoustic output [dB]

	B																					
A	**180**	**200**	**225**	**250**	**280**	**300**	**315**	**355**	**400**	**450**	**500**	**550**	**560**	**600**	**630**	**650**	**700**	**710**	**750**	**800**	**900**	**1000**
180	>55	55	53	52	49	47	48	47	47	47	46	46	46	46	46	45	45	45	45	45	45	45
200	>55	55	52	49	48	48	47	47	47	45	45	45	44	44	44	44	45	45	45	45	45	45
225	>55	54	50	48	47	47	47	45	44	44	44	44	44	44	44	44	44	44	44	44	44	43
250	>55	52	49	48	47	46	46	44	44	44	44	44	44	44	43	43	43	43	43	43	43	43
280	54	50	49	47	46	45	45	44	44	44	43	43	43	43	42	42	42	42	42	42	42	42
300	54	49	47	46	45	45	44	44	43	43	43	43	43	42	42	42	42	41	42	42	42	41
315	54	51	48	47	45	45	44	44	44	43	43	42	42	41	41	41	41	41	41	41	41	41
355	54	50	48	45	44	43	43	43	42	42	42	41	41	41	41	41	41	41	41	41	40	40
400	54	49	46	45	43	43	43	43	42	42	41	40	40	40	40	40	40	40	40	40	40	40
450	52	47	46	43	42	42	42	41	41	40	40	40	40	40	40	40	40	40	40	39	39	39
500	51	48	46	44	43	43	43	41	41	40	40	40	40	40	40	40	40	40	39	39	39	39
550	49	47	46	44	43	43	42	41	40	40	40	40	40	40	40	39	39	39	39	39	39	38
560	49	47	46	44	43	43	42	41	40	40	40	40	40	40	40	39	39	39	39	39	39	38
600	50	47	45	43	43	42	42	41	40	40	40	40	40	40	39	39	39	39	39	38	38	38
630	50	48	45	43	43	42	42	41	40	40	40	40	40	40	40	40	40	40	38	38	38	38
650	50	48	45	43	42	42	42	41	40	40	40	40	39	39	39	39	39	38	38	38	38	38
700	50	48	45	42	42	42	42	41	40	40	40	40	39	39	39	39	39	38	38	38	38	38
710	50	48	45	42	42	42	42	41	40	40	40	40	39	39	39	39	39	38	38	38	38	38
750	50	47	45	42	42	42	42	41	40	40	40	40	39	39	39	39	39	38	38	38	38	38
800	50	47	45	42	42	42	42	41	40	40	40	40	39	39	39	39	39	38	38	38	38	38
900	49	47	44	42	42	42	41	40	40	40	40	39	39	39	39	39	38	38	38	38	38	38
1000	49	47	43	42	42	42	40	40	40	40	40	39	39	39	39	38	38	38	38	38	38	38
1100	49	47	43	42	42	42	40	40	40	40	40	39	39	39	39	38	38	38	38	38	38	38
1250	49	47	43	42	42	42	40	40	40	40	39	39	39	39	38	38	38	38	38	38	38	38
1400	48	46	43	42	42	41	40	40	40	39	38	38	38	38	38	38	38	38	38	38	38	37
1500	48	46	43	42	41	41	40	40	40	39	38	38	38	38	38	38	38	38	38	38	38	37
1600	48	46	43	42	41	41	40	40	40	39	38	38	38	38	38	38	38	38	38	38	38	37

Air velocity 6 m/s
Level of acoustic output [dB]

	B																					
A	**180**	**200**	**225**	**250**	**280**	**300**	**315**	**355**	**400**	**450**	**500**	**550**	**560**	**600**	**630**	**650**	**700**	**710**	**750**	**800**	**900**	**1000**
180	>55	>55	>55	>55	55	54	54	54	54	52	52	52	52	52	52	52	52	52	51	51	51	51
200	>55	>55	>55	55	54	54	53	53	52	51	50	50	50	50	50	50	50	50	50	50	50	48
225	>55	>55	>55	54	52	52	52	51	50	50	49	48	48	48	48	48	48	48	48	48	47	47
250	>55	>55	55	53	52	52	51	50	50	49	48	48	48	47	47	47	47	47	47	47	47	47
280	>55	>55	54	52	51	50	50	49	48	48	48	47	46	46	46	46	46	46	46	46	46	46
300	>55	>55	54	52	50	50	50	48	47	47	46	46	46	46	46	46	46	46	46	46	47	45
315	>55	55	53	52	50	49	50	48	47	46	46	46	46	46	46	46	46	46	47	47	46	46
355	>55	55	53	51	50	49	48	47	47	46	46	46	46	46	46	46	46	46	46	46	46	46
400	>55	54	52	50	49	48	48	47	45	45	45	45	45	45	45	45	45	45	45	45	45	45
450	>55	54	51	50	48	48	47	46	45	45	45	45	45	45	45	45	45	45	45	45	45	45
500	55	54	51	49	48	48	47	45	45	45	45	45	45	45	45	45	45	45	45	45	43	43
550	55	53	50	50	48	47	45	45	45	45	45	45	45	45	45	45	45	45	45	44	44	44
560	55	53	50	50	48	47	45	45	45	45	45	45	45	45	45	45	45	45	45	44	44	44
600	55	53	50	50	48	47	45	45	45	45	45	45	45	44	44	44	44	44	44	44	44	44
630	55	53	50	49	48	47	45	45	45	45	45	45	44	44	44	44	44	44	44	44	44	44
650	55	52	50	49	48	47	45	45	45	45	45	45	44	44	44	44	44	44	43	43	43	43
700	55	52	50	48	48	46	46	45	45	45	45	45	44	44	44	44	44	44	43	43	43	43
710	55	52	50	48	48	46	46	45	45	45	45	45	44	44	44	44	44	44	43	43	43	43
750	55	52	50	48	48	46	45	45	45	45	45	45	44	44	44	44	44	44	43	43	43	43
800	55	52	50	48	48	46	45	45	45	45	45	45	44	44	44	44	43	43	43	43	43	43
900	55	52	49	48	47	45	45	45	45	45	45	44	43	43	43	43	43	43	43	43	43	43
1000	55	52	49	48	47	45	45	45	45	45	44	44	44	43	43	43	43	43	43	43	43	43
1100	54	52	49	48	46	45	45	45	45	44	44	44	44	43	43	43	43	43	43	43	43	43
1250	54	52	49	47	45	45	45	45	45	44	44	44	44	43	43	43	43	43	43	43	43	43
1400	54	52	48	48	46	44	44	44	45	44	43	43	43	43	43	43	43	43	43	43	43	42
1500	54	52	48	48	45	44	44	44	45	44	43	43	43	43	43	43	43	43	43	43	42	42
1600	54	52	48	48	45	44	44	45	45	45	43	43	43	43	43	43	43	43	43	42	42	42

Air velocity 7 m/s
Level of acoustic output [dB]

	B																					
A	**180**	**200**	**225**	**250**	**280**	**300**	**315**	**355**	**400**	**450**	**500**	**550**	**560**	**600**	**630**	**650**	**700**	**710**	**750**	**800**	**900**	**1000**
180	>61	>61	>61	>61	61	60	60	58	58	57	56	56	56	55	55	55	55	55	55	56	55	55
200	>61	>61	>61	>61	59	58	58	57	56	55	55	55	55	55	55	55	55	54	54	54	54	54
225	>61	>61	>61	60	57	56	56	55	55	55	54	54	53	53	53	53	53	53	53	53	53	53
250	>61	>61	>61	58	56	56	56	55	54	53	53	53	53	53	52	52	52	52	52	53	52	52
280	>61	>61	60	57	56	55	55	54	53	52	52	52	51	51	51	51	51	51	51	51	50	50
300	>61	61	58	57	55	54	54	53	53	52	52	52	52	52	52	50	50	50	50	50	50	50
315	>61	61	57	56	55	55	54	53	52	52	51	51	51	51	50	50	50	50	50	49	49	49
355	>61	61	57	55	54	53	53	52	52	52	51	50	50	50	50	50	49	49	49	48	48	48
400	>61	60	57	55	53	53	53	52	51	51	49	49	49	49	49	48	48	48	48	48	48	48
450	>61	59	56	54	52	52	52	51	50	50	50	48	48	48	48	48	48	48	48	48	48	48
500	60	58	55	54	53	52	52	50	50	50	48	48	48	48	48	48	48	48	48	48	48	48
550	60	58	55	54	53	52	52	50	50	48	48	48	48	48	48	48	48	48	48	48	48	48
560	60	58	55	54	53	52	52	50	50	48	48	48	48	48	48	48	48	48	48	48	48	48
600	60	58	55	54	52	52	51	50	49	48	48	48	48	48	48	48	48	48	48	48	48	48
630	60	58	55	53	51	51	51	50	49	48	48	48	48	48	48	48	48	48	48	48	48	48
650	60	58	55	53	52	51	51	50	49	48	48	48	48	48	48	48	48	48	48	48	48	48
700	59	58	55	53	52	51	51	50	49	48	48	48	48	48	48	48	48	48	48	48	48	48
710	59	58	55	53	52	51	51	50	49	48	48	48	48	48	48	48	48	48	48	48	48	48
750	59	58	55	53	52	51	51	50	49	48	48	48	48	48	48	48	48	48	48	48	48	48
800	59	58	55	53	52	51	51	50	49	48	48	48	48	48	48	48	48	48	48	48	48	48
900	58	56	53	53	52	50	50	48	48	47	48	48	48	48	48	48	48	48	48	48	47	47
1000	58	56	53	53	51	50	50	48	48	48	48	48	48	48	48	48	48	48	48	48	47	47
1100	58	56	53	53	51	50	50	48	48	48	48	48	48	48	48	48	48	48	48	47	47	47
1250	58	56	53	53	51	50	50	48	48	48	48	48	48	48	48	48	48	48	48	47	47	47
1400	58	56	53	52	51	50	48	48	47	47	47	47	47	47	47	47	47	47	47	47	47	46
1500	58	56	53	52	51	50	50	48	47	47	47	47	47	47	47	47	47	47	47	47	47	46
1600	58	56	53	52	51	50	50	48	47	47	47	47	47	47	47	47	47	47	47	47	47	46

Air velocity 8 m/s
Level of acoustic output [dB]

	B																					
A	**180**	**200**	**225**	**250**	**280**	**300**	**315**	**355**	**400**	**450**	**500**	**550**	**560**	**600**	**630**	**650**	**700**	**710**	**750**	**800**	**900**	**1000**
180	>63	>63	>63	>63	>63	>63	>63	63	62	61	61	60	60	60	60	60	60	60	60	60	60	59
200	>63	>63	>63	>63	>63	62	62	61	60	60	60	60	60	60	60	60	60	60	59	59	59	58
225	>63	>63	>63	>63	>63	61	61	60	60	58	58	58	58	58	58	58	58	58	58	57	57	57
250	>63	>63	>63	>63	61	60	60	59	58	58	57	57	57	57	57	57	57	57	56	56	56	56
280	>63	>63	>63	>63	59	59	59	58	58	57	57	56	56	56	56	56	56	56	56	55	55	54
300	>63	>63	62	61	59	59	59	58	57	56	56	55	55	55	55	55	55	55	55	54	54	54
315	>63	>63	62	61	59	59	58	57	57	56	55	55	55	55	55	55	55	55	55	55	54	54
355	>63	>63	63	59	58	58	57	56	55	55	54	54	54	54	54	54	53	53	53	53	53	53
400	>63	63	62	60	58	57	56	56	55	54	54	54	54	54	54	54	53	53	53	53	52	52
450	>63	63	60	58	57	56	56	55	55	55	54	53	53	53	53	53	53	53	53	53	52	52
500	>63	62	60	58	56	55	55	54	54	54	53	53	53	53	53	53	53	53	53	52	51	51
550	>63	62	59	58	56	56	55	55	54	53	53	53	53	53	53	53	53	53	52	52	51	51
560	>63	62	59	58	56	56	55	55	54	53	53	53	53	53	53	53	53	53	52	52	51	51
600	>63	62	59	58	56	55	55	54	54	53	53	53	53	53	52	52	52	51	51	51	50	50
630	>63	62	59	58	56	55	55	54	54	53	53	53	53	53	52	52	52	51	50	50	50	50
650	>63	61	59	58	56	55	55	54	54	53	53	53	52	51	51	51	51	51	50	50	50	50
700	63	62	59	57	56	55	55	54	54	53	53	53	52	51	51	50	50	50	50	50	49	49
710	63	62	59	57	56	55	55	54	54	53	53	53	52	51	51	50	50	50	50	50	49	49
750	63	62	59	57	56	55	55	54	54	53	52	52	52	52	51	50	50	50	50	50	50	49
800	62	60	57	57	56	55	54	54	54	52	52	52	52	51	51	50	50	50	50	50	50	49
900	62	60	57	56	55	55	54	53	53	52	52	51	51	51	50	50	50	50	50	50	50	50
1000	62	60	57	56	56	55	54	53	53	52	52	51	51	51	50	50	50	50	50	50	50	50
1100	62	60	57	56	56	55	54	53	53	52	51	51	51	50	50	50	50	50	50	50	50	50
1250	62	61	58	56	56	54	54	53	53	52	50	50	50	50	50	50	49	49	49	49	49	49
1400	62	61	57	56	56	53	54	53	53	50	50	50	50	50	50	50	49	49	49	49	49	49
1500	62	61	57	56	56	54	54	53	52	50	50	50	50	50	50	50	49	49	49	49	49	49
1600	62	61	57	56	56	54	54	53	52	50	50	50	50	50	50	50	49	49	49	49	49	49

Air velocity 9 m/s
Level of acoustic output [dB]

	B																				
A	**180**	**200**	**225**	**250**	**280**	**300**	**315**	**355**	**400**	**450**	**500**	**550**	**560**	**600**	**630**	**650**	**700**	**710**	**750**	**800**	**900**	**1000**
180	>65	>65	>65	>65	>65	>65	>65	>65	>65	65	64	64	64	64	64	64	64	64	64	63	63	63
200	>65	>65	>65	>65	>65	>65	>65	65	64	64	63	63	63	62	62	62	62	62	62	62	61	61
225	>65	>65	>65	>65	>65	>65	65	63	63	62	61	61	61	61	61	61	61	61	61	61	60	60
250	>65	>65	>65	>65	>65	65	65	63	62	61	60	60	60	60	60	60	60	60	60	60	60	60
280	>65	>65	>65	>65	64	63	62	61	61	60	60	60	60	59	59	59	59	59	59	59	58	58
300	>65	>65	>65	65	63	62	62	61	60	60	60	60	60	60	60	59	59	59	59	59	59	59
315	>65	>65	>65	64	63	62	61	61	60	60	60	60	60	59	59	59	59	59	59	59	59	58
355	>65	>65	>65	64	62	61	60	60	60	60	60	59	59	59	59	58	58	58	58	58	58	58
400	>65	>65	>65	63	61	60	60	59	58	58	58	58	58	58	58	58	58	58	58	57	57	57
450	>65	>65	65	63	60	60	60	59	58	58	58	57	57	57	57	57	57	57	57	56	56	56
500	>65	>65	64	61	60	60	60	59	58	57	57	57	57	57	56	56	56	56	56	56	55	55
550	>65	>65	62	62	60	60	58	57	58	58	57	57	57	56	56	56	56	56	56	56	55	55
560	>65	>65	62	62	60	60	58	57	58	58	57	57	57	56	56	56	56	56	56	56	55	55
600	>65	>65	62	62	60	59	58	58	58	57	56	56	56	56	56	56	55	55	55	55	55	55
630	>65	>65	62	62	60	59	58	58	58	57	56	56	56	56	56	56	55	55	55	55	55	55
650	>65	>65	62	62	59	59	58	58	58	57	56	56	56	56	56	56	55	55	55	55	55	55
700	>65	>65	62	61	59	59	58	58	57	56	55	55	55	55	55	55	55	55	55	55	55	54
710	>65	>65	62	61	59	59	58	58	57	56	55	55	55	55	55	55	55	55	55	55	55	54
750	>65	>65	62	61	59	59	58	57	57	56	55	55	55	55	55	55	55	55	55	55	55	55
800	>65	64	62	61	59	59	58	57	57	56	55	55	55	55	55	55	55	55	55	55	54	54
900	>65	64	62	60	60	59	58	57	57	55	55	55	55	55	55	55	54	55	55	55	54	54
1000	>65	64	60	60	58	58	58	57	57	55	55	55	55	55	55	55	55	55	55	55	54	54
1100	>65	64	60	59	58	58	57	57	57	55	55	55	55	55	55	55	55	55	55	55	54	54
1250	>65	64	60	59	58	58	57	57	56	55	55	55	55	55	54	54	54	54	54	54	54	53
1400	>65	64	61	60	58	58	57	57	56	56	55	55	55	55	55	54	54	54	54	54	53	53
1500	>65	64	60	60	58	58	56	56	56	56	55	55	55	55	55	54	54	54	53	53	53	53
1600	>65	64	60	60	58	58	56	56	56	56	55	55	55	55	55	54	54	54	53	53	53	53

VIII. MATERIAL, FINISHING

- Damper casings and blades are made of fire resistant asbestos free boards made of mineral fibres.
- Fasteners are galvanized.
- Damper bodies and blades can be coated with Promat 2000 anti-moisture coating or Promat-SR anti-aggressive coating. Fasteners are galvanized.
- Any other requirements for the design shall be considered atypical and shall be addressed on an individual basis.

IX. TRANSPORTATION AND STORAGE

Logistic terms

- Dampers are delivered on pallets. As standard, the dampers are wrapped in plastic foil for protection during transport and must not be used for long-term storage of the equipment . Changes in temperature during transport may cause condensation of water vapour inside the packaging and thereby condisitions may arise inside the packaging that are suitable for corrosion of materials used in the equipment (e.g. white corrosion on zinc-coated items or mould on calcium silicate). Therefore, it is necessary to remove the transport packaging immediately after unloading to allow air to circulate around the product.
- The equipment must be stored in a clean, dry, well ventilated and dust-free environment out of direct sunlight. To ensure protection against moisture and extremes of temperatures (minimum temperature +5°C) the equipment must be protected against mechanical and accidental damage prior to installation.
- Another required packaging system should be approved and agreed by the manufacturer. Packaging material is not returnable in case that another packaging system (material) is required and used and it is not included in the final price of damper.
- Appropriate handling equipment (e.g. forklifts) must be used for unloading and further handling of the damper due to its weight. Dampers are fragile.
- Dampers are transported by box freight vehicles without direct weather impact, there must not occur any shocks and ambient temperature must not exceed +50°C. Dampers must be protected against impact when transported and manipulated. During transportation, the damper blade must be in the "CLOSED" position.
- Dampers are stored indoors in an environment without any aggressive vapours, gases or dust. Indoor temperature must be in the range from -30°C to +50°C and maximum relative humidity 95% (avoid condensation on the damper body). Dampers must be protected against impact when transported and manipulated.

X. ASSEMBLY, ATTENDANCE AND MAINTENANCE

- Assembly, maintenance and damper function check can be done only by qualified and trained person, i.e. “AUTHORIZED PERSON” according to the manufacturer documentation. All works done on the smoke control dampers must be done according international and local norms and laws.
- All effective safety standards and directives must be obse-rved during damper assembly.
- To ensure reliable smoke control damper function it is necessary to avoid blocking the closing mechanism and contact surfaces with collected dust, fibre and sticky materials and solvents.

- Manual operation
  - Without power supply, the damper can be operated manually and fixed in any required position.

DANGER OF DAMAGE

Always:

REMOVE POWER BEFORE USING ALLEN KEY!
NEVER USE A POWER TOOL!

Both incorrect operations will damage the clutch Mechanism
NO WARRANTY CLAIM!

Electrical connection of the actuator in protection box

Protection box without slot or predrilled holes

- Drill two holes into the protection box (from outside to inside) and pull through field wiring cables (CAT 3 fire resistant cables as BS 8519) to connect to the actuator trailing lead inside the housing, using a standard screwed cable connector block, the protection box is made of calcium silicate plates.
- Procedure
  - Use drill (drill size acc. To suit connecting cable Ø + 2 mm for seal up by mastic) and make two holes. It is possible to drill holes in any side of the housing.
  - Pull the heat resistant cable through the calcium silicate plate (wall) and connect with cables from actuator acc. to above mentioned electrical diagram.
  - Seal up the space around cable with fire resistant mastic (HILTI CFS-S ACR, PROMASTOP) or equivalent.
  - Let the mastic harden.

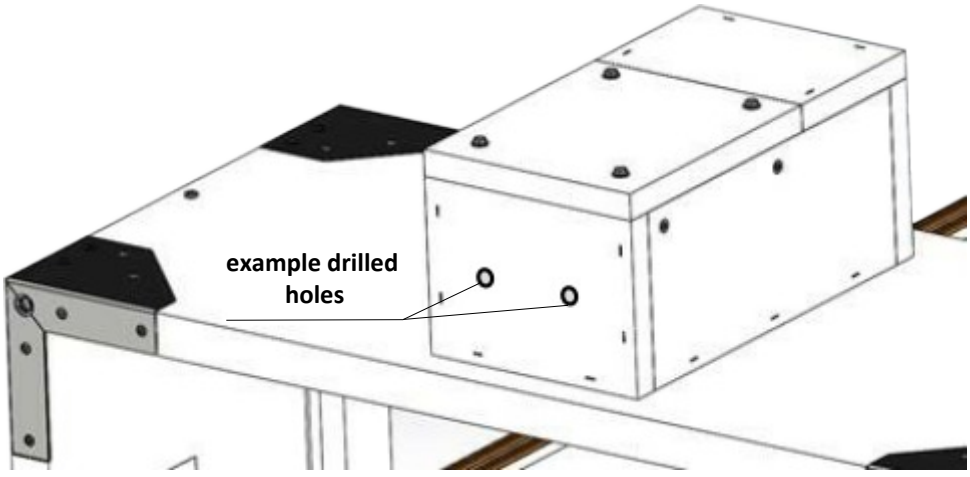

Example of position of holes in the wall of the box, without pre-manufactured slot

Connection of the control module MDPM & MDCM interfaces inside protection box

- Drill holes into the protection box (from outside to inside) and pull through field wiring cable (fire resistant cables) to connect control module. Protection box is made of calcium silicate insulating plates.
- Procedure:
  - Screw red box of MDPM/MDCM interface inside of the FIRE RATED housing to the back side, use pre drilled holes in red box and self-taping screws 4,8x25 mm. Minimum distance from walls 20 mm.
  - Use drill (drill size acc. to suit connecting cable Ø + 2 mm for seal up by mastic) and make holes (min. pitch of the holes must be 30 mm), number of holes depends on the type of control module. **It is possible to drill holes in any side of the protection box.**
  - Pull the heat resistant cable through the calcium silicate insulating plate (wall) and connect with cables from control module.
  - Seal up the space around cable with fire resistant mastic (HILTI CFS-S ACR, PROMASTOP) or equivalent.
  - Let the mastic harden.
- Placement:
  - The FIRE RATED housing can be installed onto a wall.
  - For installation, drill 4 holes in the rear of the housing (from inside to outside) with a maximum hole diameter of 8,5mm, use fixing appropriate for the application. Seal all holes and gap between FIRE RATED housing and wall with firestop (HILTI CFS-S ACR, PROMASTOP).

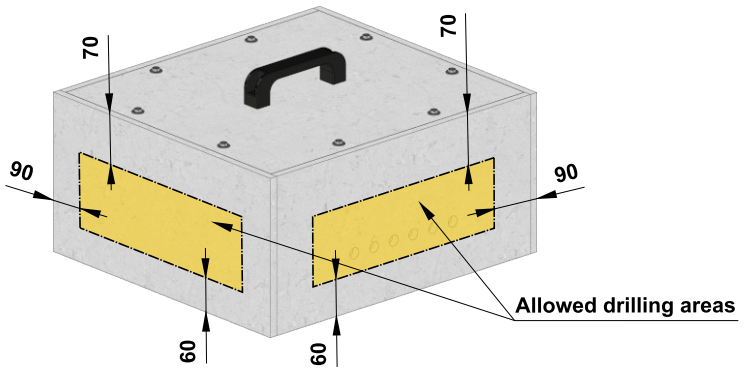

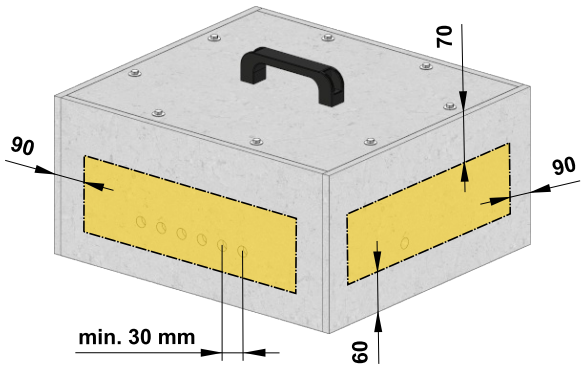

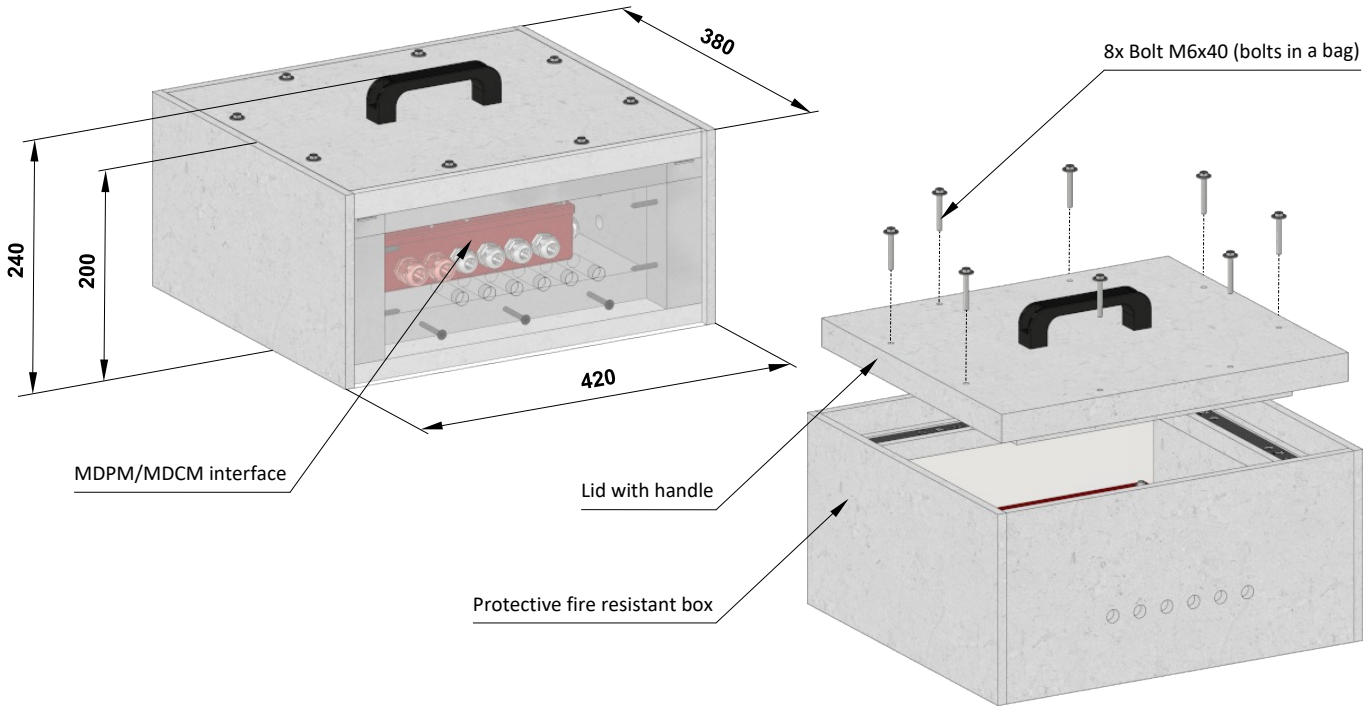

Entry into service and revisions

- Before entering the dampers into operation after assembly and after sequential revisions, checks and functionality tests of all designs including operation of the electrical components must be successfully provided and finished. After entering into operation, these revisions must be done according to requirement set by national regulations. Maintenance should be completed in line with national standards (such as BS 9999 and BS 7346-8), maintenance intervals should be in line with these standards or not exceeding 6 months (as EN 12101-8)
- In case that dampers are found unable to serve for their function for any cause, it must be clearly marked. The operator is obliged to ensure that the damper is put into condition in which it is ready for function and meanwhile he is obliged to provide the fire protection by another appropriate way.
- Results of regular checks, imperfections found and all-important facts connected with the damper function must be recorded in the "FIRE BOOK" and immediately reported to the operator.
- Before entering the dampers into operation after their assembly and by sequential checks, the following checks must be carried out for all designs.
- Visual inspection of proper damper integration, inside damper area, damper blade, contact surfaces and silicon sealing.
- <u>Removing the inspection hole cover</u>
  - Unscrew four of the edge screws to release the cover and then remove it from its original position.

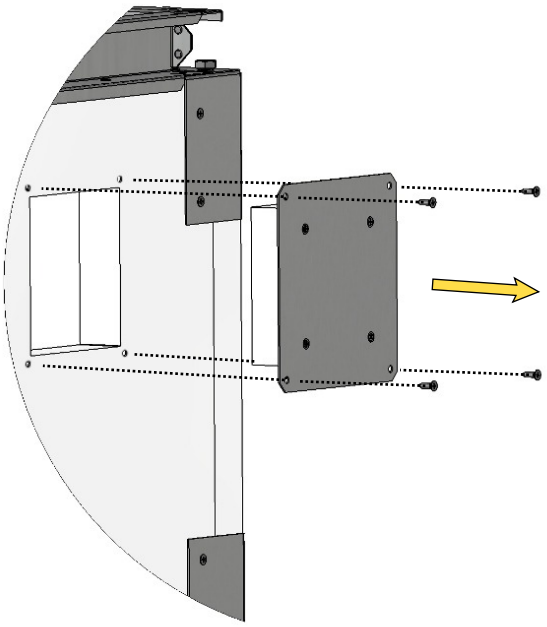

Inspection hole detail

- Ensure each damper is fully checked for operational capability, control should be initiated from the control system. Dampers blades should open and close correctly and operation should be visually inspected and documented prior to handover.

XI. ORDERING INFORMATION

Ordering key



EXAMPLE:
SEDM UK 1500x600/500 .44 P1 Q30-ZN IW
Smoke control damper SEDM, dimension 1500x600 mm, built length 500 mm, control design with Drive open/Drive closed AC 230 V, flange on the blade side, flange dimension 30 mm, galvanized material variant, impregnation against humidity.

1| Type of smoke control damper - SEDM

2| Country of destination

3| Damper dimensions A x B → see pages 12 to 23
„A“ is the width of the damper
„B“ is the height of the damper

4| Built length - 500 mm

5| Damper design

.44	With actuating mechanism BEN, BEE, BE, InMax 50.75-S for 230V
.44M	With actuating mechanism BEN, BEE, BE, InMax 50.75-S + control module BRM-20-F for 230V
.44M2	With actuating mechanism BEN, BEE, BE, InMax 50.75-S + control module BRM2-20-F for 230V
.54	With actuating mechanism BEN, BEE, BE, InMax 50.75-S for 24V
.54M	With actuating mechanism BEN, BEE, BE, InMax 50.75-S + control module BRM-20-F for 24V
.54M2	With actuating mechanism BEN, BEE, BE, InMax 50.75-S + control module BRM2-20-F for 24V
.65 *	With actuating mechanism BEN (BEE)-SR for 24V
.67 **	With actuating mechanism BEN, BEE, BE-ST
.67M **	With actuating mechanism BEN, BEE, BE-ST + control module BRM-20-F-ST for 24V

* *Design is not available by using actuating mechanism BE, InMax 50.75-S*

** *Design is not available by using actuating mechanism InMax 50.75-S*

6| Accessories

	Without flanges
P	With flanges on both sides
P1	Flange on the blade side → see page 11
P2	Flange on the actuating mechanism side → see page 11

7| Flange dimension

Q30	Flange width 30 mm

8| Material

ZN	Galvanized

9| Surface treatment

	Without surface treatment
IW	Damper blade impregnation, impregnating agent PROMAT 2000 - impregnation against humidity
IA	Damper blade impregnation, impregnating agent PROMAT SR - impregnation against chemical

Accessories

Flange

1	2	3	4
FLANGE	P1	SEDM	1500x600

1| Accessory type - flange

3| Type of smoke control damper - SEDM

4| Damper dimensions A x B → see pages 12 to 23

2| Flange design

P	With flanges on both sides
P1	Flange on the blade side → see page 11
P2	Flange on the actuating mechanism side → see page 11

Installation holder

1	2
INSTALLATION HOLDER	L = 500

1| Accessory type - installation holder

2| Installation holder design

L = 500	Length 500 mm
L = 250	Length 250 mm

Data label

- Data label is placed on the damper casing (example)





The producer reserves the right for innovations of the product.
For actual product information see www.mandik.co.uk

MANDÍK®

www.mandik.co.uk



Manufacturer
MANDÍK, a.s. • Dobříšská 550 • 267 24 Hostomice • Czech Republic • Tel.: +420 311 706 742 • E-Mail: mandik@mandik.cz
Authorized representative
Mandik UK Limited • 210 Park Avenue • Aztec West • Bristol BS32 4SY • United Kingdom • Tel.: +44 117 4526376 • E-Mail: help@mandik.co.uk